USER MANUAL

One-Pass Stubble Cultivators

Maximulch

Series 3 | Series 5 | Series 6

GB - Original manual

AGRISEM INTERNATIONAL S.A
535 Rue Pierre Levasseur
CS 60263
44158 ANCENIS
FRANCE
Tel.: +33 (0)2.51.14.14.40
Fax: +33 (0)2.40.96.32.36

NOTT-GB-708-A 06/12/2019

Contents

FOREWORD **5**

1. Introduction **6**

1.1. Purpose of the user manual 6
1.2. Using the manual 6
1.3. Ordering the manual 7
1.4. Interpreting the version of the manual 7
1.5. Description of warning terms 7

2. Presentation of the machine **9**

2.1. Intended use of the equipment 9
2.2. General view of the machine 10

3. Identification **17**

3.1. Validity of the user manual 17
3.2. Location and description of data plate 17
3.3. Identification of the machine 21

4. Warranty **22**

4.1. Warranty conditions 22
4.2. Exclusive liability clause 25

5. Safety instructions **26**

5.1. Safety instructions 26
5.2. Safety symbols on the machine 40

6. Operation **48**

6.1. Location and description of controls 48
6.2. Start-up 56
6.3. Hitching/unhitching 56
6.4. Folding / unfolding 60
6.5. When driving on the road 68
6.6. Dual-line air brake system 68
6.7. Single-line air brake system 69
6.8. Mechanical braking system 70
6.9. Adjusting the working depth 70
6.10. Adjusting the left-hand side deflector 76
6.11. Adjusting the right-hand side deflector 77
6.12. Adjusting the clod-breaking board 78

6.13. Adjusting the border spreading disc 78
6.14. Types of roller and applications 80
6.15. Accessories 81
6.16. Soft ground adjustment recommendations 82
6.17. Firm ground adjustment recommendations 83
6.18. Immobilising the tractor/machine 83

7. Winter Storage - Handling - Transport 85

7.1. Storage 85
7.2. Handling 86
7.3. Transport 91

8. Servicing - Maintenance 96

8.1. Maintenance tips 96
8.2. Maintenance consumables 100
8.3. Maintenance schedule 100
8.4. Maintenance operations 101

9. Faults, causes and remedies 117

10. Characteristics 118

10.1. Series 3 118
10.2. Series 5 119
10.3. Series 6 120

11. Technical terms and abbreviations 121

12. Appendices 123

FOREWORD

We thank you for the confidence you have shown in AGRISEM INTERNATIONAL by purchasing this item of equipment.

This manual is provided with your machine to enable you to make best use of your equipment, and in particular in compliance with the safety requirements.

All owners are reminded that the manual is an essential accessory which must remain with the machine at all times, and that in the event of resale, article 1615 of the Civil Code requires that as such it must be handed over to the new owner.

You are also reminded that as the manual is essential to the machine, all owners must undertake to leave it physically available with the machine for all users to consult.

This manual contains details of the characteristics of your new equipment. Please read it and ensure that all users scrupulously follow the instructions contained. The following pages provide essential information on your machine, read them carefully.

Your AGRISEM INTERNATIONAL dealer will provide high quality servicing, as well as any assistance you may require. For servicing, remember that your dealer is the person who is most familiar with your machine and wishes to give you complete satisfaction.

All information and characteristics given in this manual are current at the time of publication. However, the policy of continuous improvement of our products requires us to reserve the right to make changes at any time without prior notice.

This user manual is published for wide circulation and the availability of the equipment indicated, whether on the basic machine or as accessories, may vary according to the region in which the machine is used. All combinations available at the time of publishing the manual will be described therein.

1. Introduction

1.1. Purpose of the user manual

You have just taken ownership of your AGRISEM INTERNATIONAL machine. This machine has been designed to ensure complete satisfaction.

The equipment has been specially designed to incorporate new solutions for lowering the costs of operation.

However, for the best and most cost-effective use of your AGRISEM INTERNATIONAL machine, please read this manual carefully before starting it up and strictly follow the instructions. In particular, follow the instructions for adjusting and servicing the machine, as well as the safety precautions, very carefully.

Please contact our distributor for any information or advice.

This user manual is an integral part of the machine and must always accompany it, especially in the event of resale.

AGRISEM INTERNATIONAL is constantly seeking to improve its products and reserves the right to modify or improve its products with no obligation to apply these modifications or improvements to products already on the market.

The instructions in this manual are not exhaustive and cannot cover all eventualities. The user must comply with the applicable legislation, in particular with regard to safety, ensure that the rules of safety and caution dictated by the situation are applied, use common sense and adapt the use of the machine to the circumstances.

It is the Purchaser's responsibility to check that the AGRISEM INTERNATIONAL machine complies with the legislation and regulations applicable to its final destination.

DANGER

The instructions in this user manual must be read, understood and applied by any persons who will be carrying out work on or with the machine, in particular:

- use of the machine (including preparation, repairs required during work and maintenance),
- maintenance (servicing and inspection),
- transport.

AGRISEM INTERNATIONAL cannot be held liable for personal injury or damage to equipment and malfunctions resulting from failure to comply with the instructions given by the manufacturer in this manual.

IMPORTANT

AGRISEM INTERNATIONAL information

Return the warranty certificate within 15 days together with a copy of the invoice (*without these documents the warranty procedure cannot be implemented*).

1.2. Using the manual

1.2.1. Functional organisation

Wherever possible, the contents of the user manual are classed by function.

1.2.2. Search help

The table of contents helps you to find information.

1.3. Ordering the manual

You can order the user manual by sending a request to:

AGRISEM INTERNATIONAL S.A.

535 Rue Pierre Levasseur

CS 60263

44158 ANCENIS - France

Tel.: +33 (0)2.51.14.14.40 – Fax: +33 (0)2.40.96.32.36

1.4. Interpreting the version of the manual

The version of the manual is indicated on the cover page and consists of the following.

Description of manual version

Example: NOTT-GB-705-A

Character	Description
NOTT	User manual
FR GB DE PL RU	French English German Polish Russian
705	Type of machine
A	Version of the manual

1.5. Description of warning terms

DANGER

This pictogram indicates a hazardous situation for the user.

Consequences: death or serious injury are inevitable.

WARNING

This pictogram indicates a hazardous situation for the user.

Consequences: death or serious injury may occur.

CAUTION

This pictogram indicates a hazardous situation for the user and the equipment.

Consequences: the user may suffer minor injuries, the equipment may suffer minor damage.

IMPORTANT

This pictogram indicates required information.

Consequences: material damage, physical risks, financial risks.

NOTE

This pictogram provides advice.

Consequences: more efficient use.

BARRED BIN

Indicates that waste must not be disposed of in a conventional dustbin but collected through special channels.

MOEBIUS LOOP

The universal recycling symbol. It indicates that the product or its packaging is technically recyclable, not that it is or will be recycled.

The products will only be recycled under two conditions:

- the sorting and recycling channel exists in your region,
- the products have been correctly sorted.

2. Presentation of the machine

2.1. Intended use of the equipment

The AGRISEM INTERNATIONAL Maximulch range of One-Pass stubble cultivators is exclusively designed for professional use in accordance with the recognised rules for the purposes of performing agricultural work.

Maximulch stubble cultivators are designed and adapted to be connected to the hitching and towing system of a tractor for:

- carrying out shallow cultivation to bury stubble and leftover straw and assist their decomposition.

Maximulch stubble cultivators must be operated, maintained and repaired only by persons who are entirely familiar with the machine and who are aware of the possible risks.

Correct use implies strictly adhering to the instruction given in the user manual as well as the operating, servicing and repair rules defined by the manufacturer.

The user and the owner are responsible for complying with the specific accident prevention instructions and well as the general rules relating to safety, occupational medicine and highway legislation.

Any use other than that defined above will be deemed to be inconsistent with the intended use and will exempt the manufacturer from all from any liability in the event of damage or injury. The risks of such use shall be borne by the user alone.

Competencies and level of training

Activity	Person having received instruction	Person having undergone specialised training	Person specially trained for this activity
Loading/transport	-	x	x
Start-up	x	x	-
Installation and set-up of equipment	-	x	-
Operation	x	x	-
Servicing	x	x	-
Troubleshooting and resolution of faults and incidents	x	x	-
Waste reprocessing/disposal	-	-	x

2.2. General view of the machine

2.2.1. Differences between Maximulch cultivator models

	Model	Series 3 tractor-mounted	Series 3 HD tractor-mounted	Series 3 trailed	Series 5	Series 6
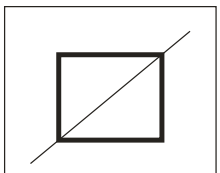 NOTT-0030	**Beam size (mm)**	discs: 100 x 100 blades: 120 x 120	120 x 120	120 x 120	120 x 120	120 x 120
NOTT-0031	**Size of 3D security (mm)**	30 x 30	35 x 35	35 x 35	35 x 35	35 x 35
NOTT-0032	**Hub size (mm)**	SR Ø 80	SRE Ø 100	SR Ø 80 optional: SRE Ø 100	SRE Ø 100	SRE Ø 100
NOTT-0033	**Disc size (mm)**	Ø 560	Ø 560 optional: Ø 610	Ø 560 optional: Ø 610	Ø 610	Ø 610
NOTT-0413	**Working depth (cm)**	25	30	25	40	30
NOTT-0035	**Distance between elements (mm)**	Distance between disc support beams 1520 mm, 250 mm pitch + row of tines in the middle	Distance between disc support beams 1640 mm, 290 mm pitch + row of tines in the middle	Distance between disc support beams 1940 mm, 250 mm pitch + row of tines in the middle, 600 mm pitch	Distance between disc support beams 1070 mm, 310 mm pitch + 2 rows of tines 2000 mm apart, 440 mm pitch	Distance between disc support beams 800 mm, 360 mm pitch + 3 rows of tines 2000 mm apart, pitch: 307 mm/4 m, 330 mm/5 m, 315 mm/6 m

2.2.2. Maximulch series 3 fixed tractor-mounted

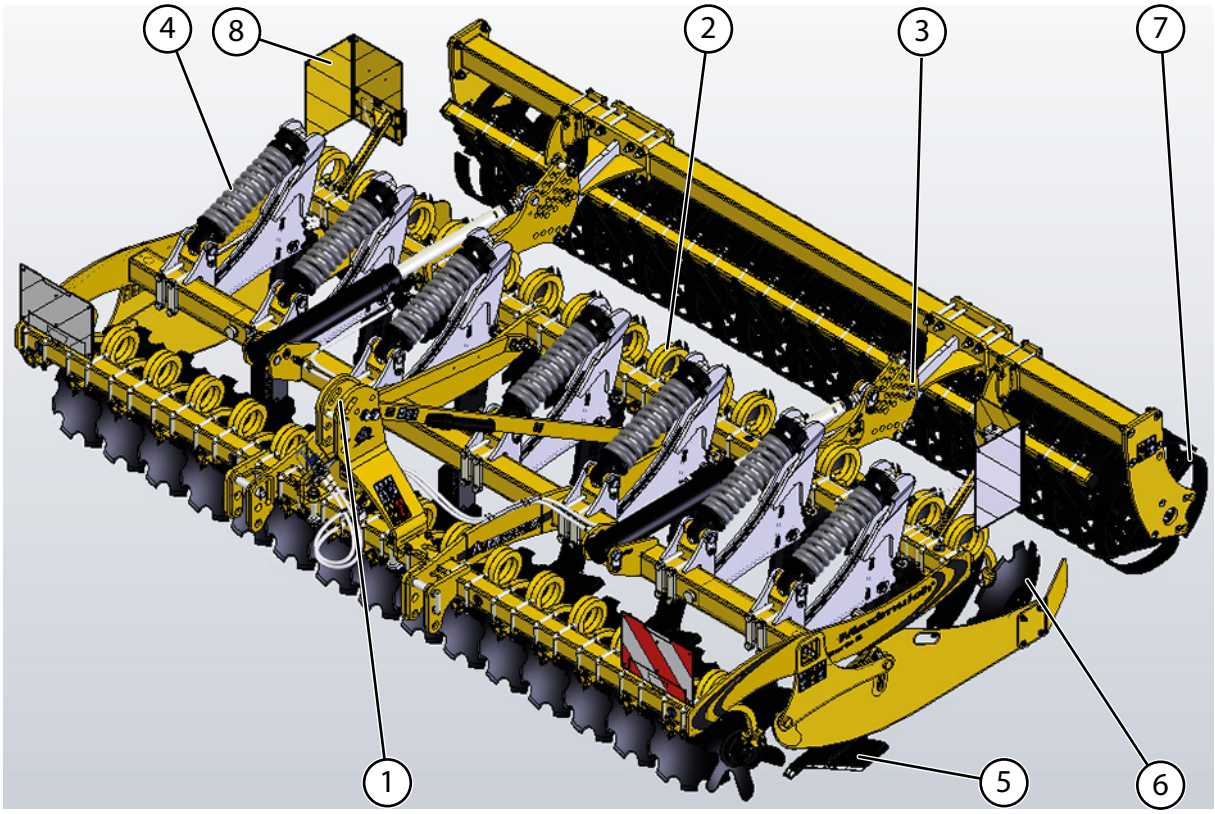

NOTT-0384

Fig. 1

No.	Description
1	Hitch
2	3D security
3	Multistop depth adjustment system
4	Blade security
5	Blades
6	Mulcher discs
7	Rollers
8	Signalling lights and panels

2.2.3. Maximulch series 3 HD tractor-mounted

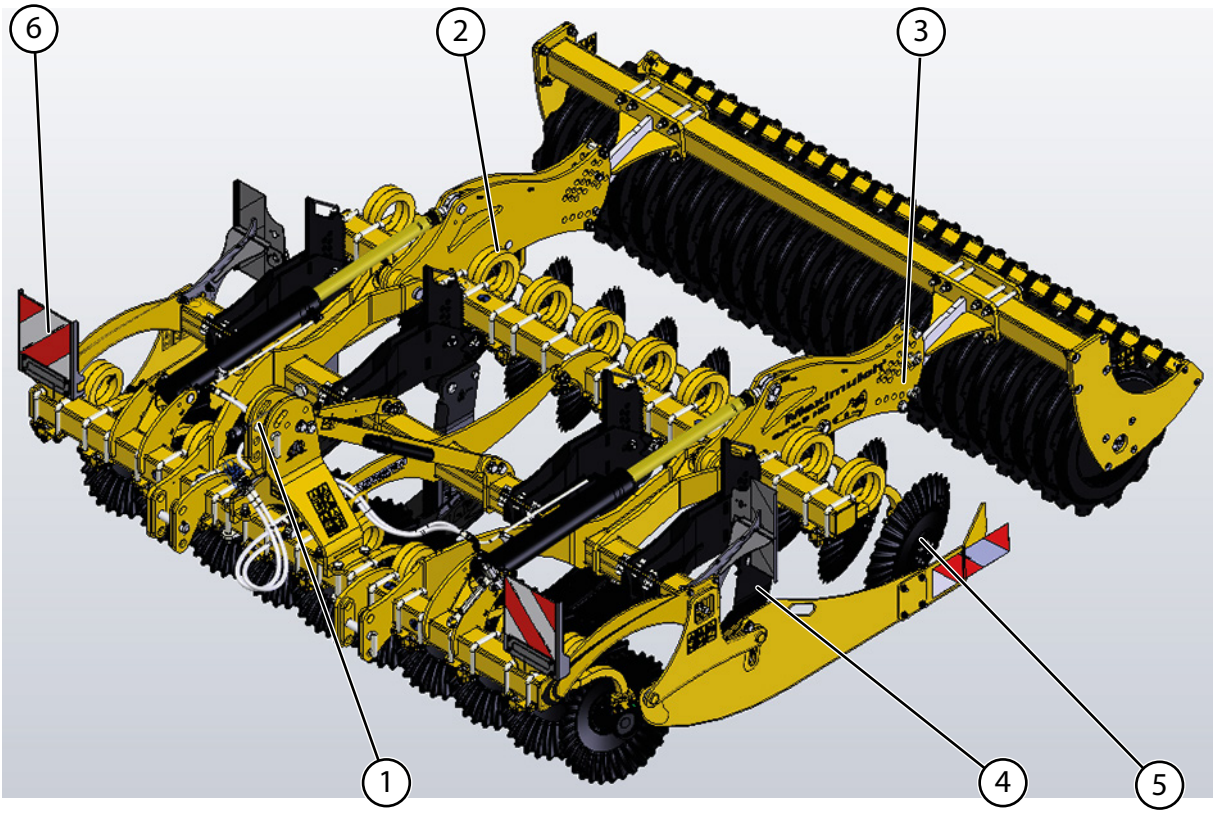

NOTT-0414

Fig. 2

No.	Description
1	Hitch
2	3D security
3	Multistop depth adjustment system
4	Blades
5	Mulcher discs
6	Signalling lights and panels

2.2.4. Maximulch series 3 folding trailed

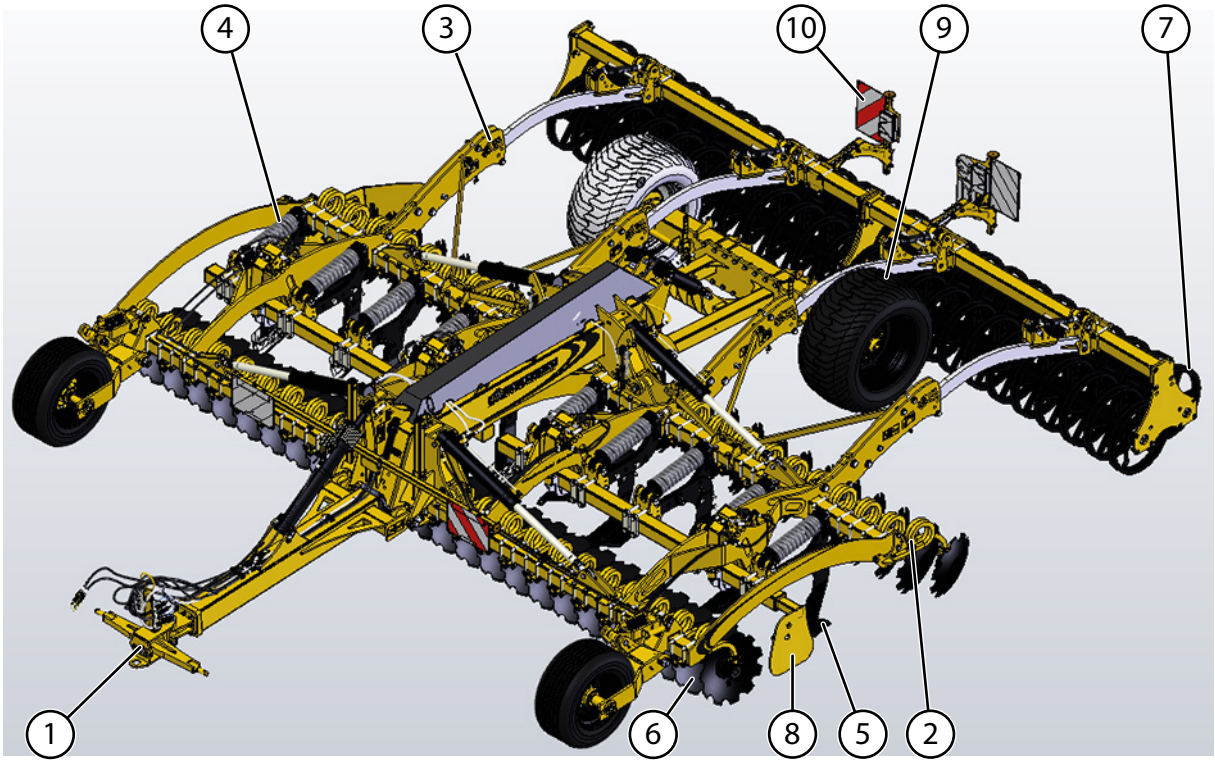

NOTT-0385

Fig. 3

No.	Description
1	Hitch
2	3D security
3	Multistop depth adjustment system
4	Blade security
5	Blades
6	Mulcher discs
7	Rollers
8	Deflectors
9	Transport wheels
10	Signalling lights and panels

2.2.5. Maximulch series 5 fixed trailed

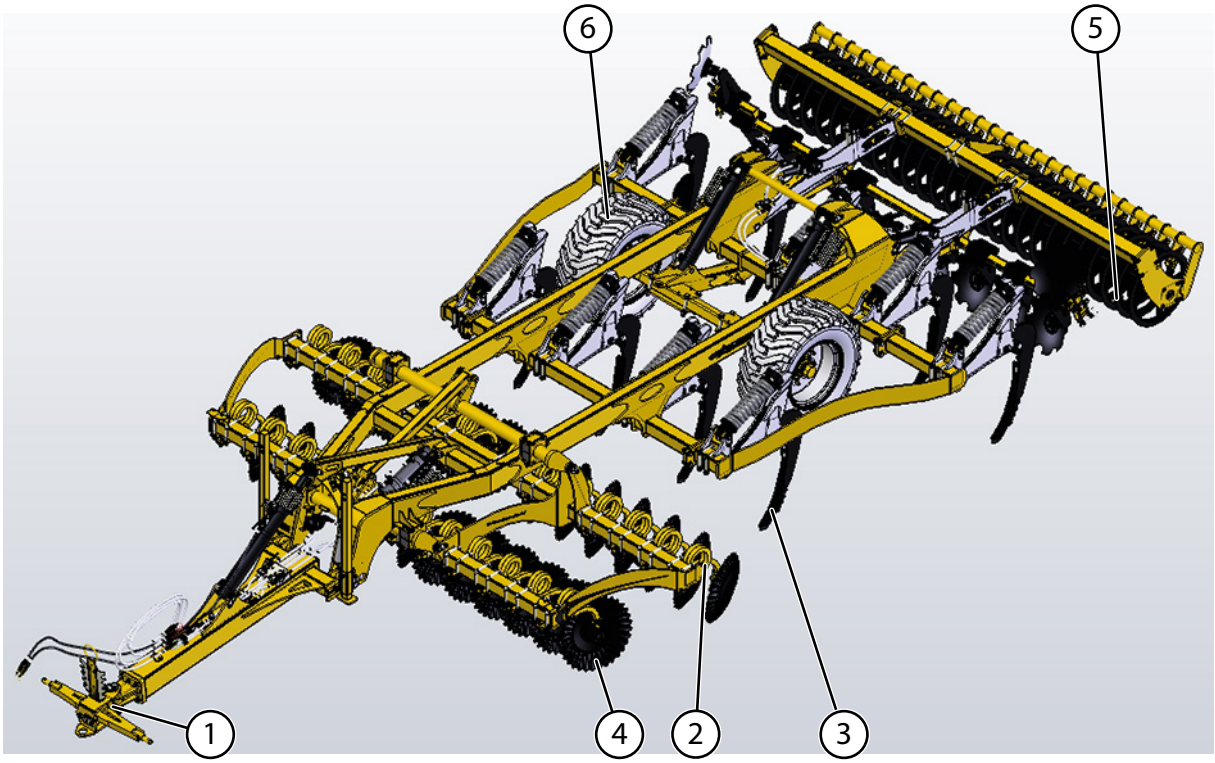

NOTT-0386

Fig. 4

No.	Description
1	Hitch
2	3D suspension
3	Blades
4	Mulcher discs
5	Rollers
6	Transport wheels

2.2.6. Maximulch series 5 folding trailed

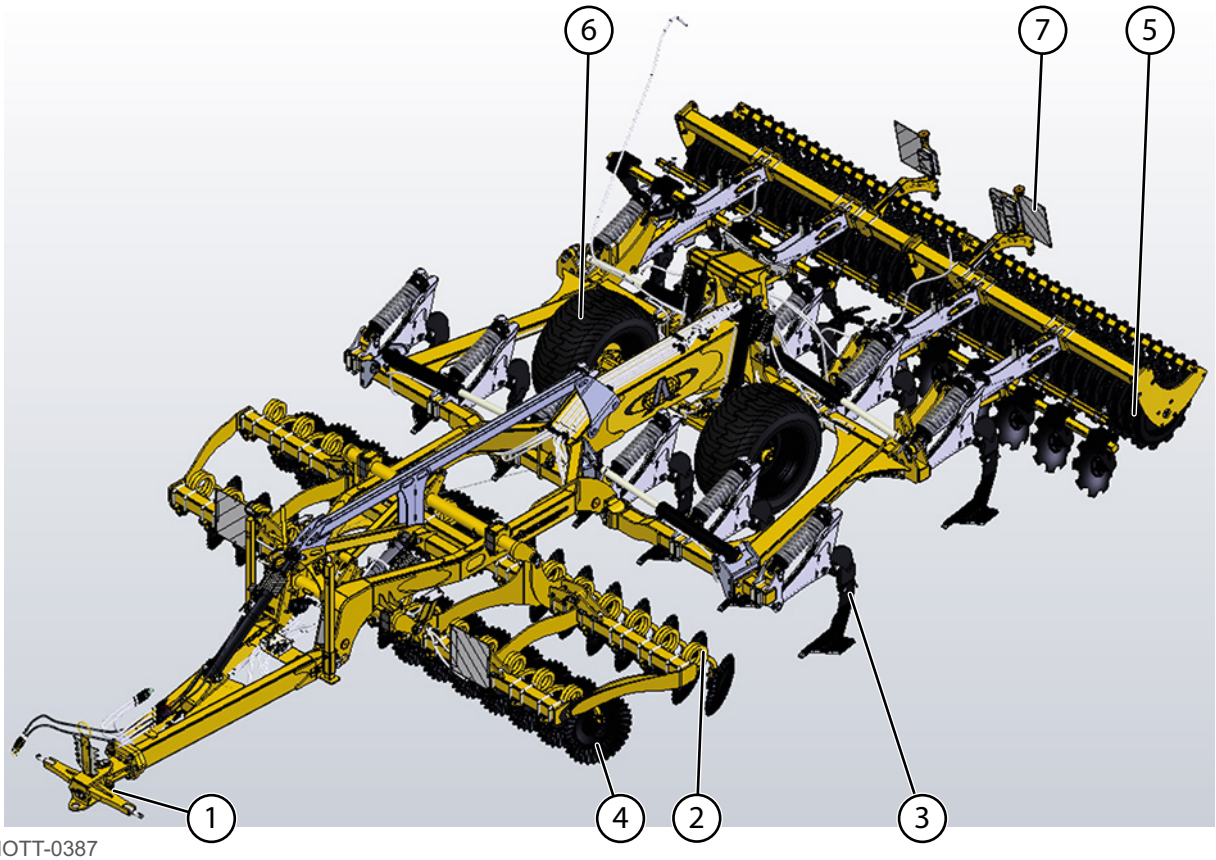

NOTT-0387

Fig. 5

No.	Description
1	Hitch
2	3D suspension
3	Blades
4	Mulcher discs
5	Rollers
6	Transport wheels
7	Signalling lights and panels

2.2.7. Maximulch series 6 folding trailed

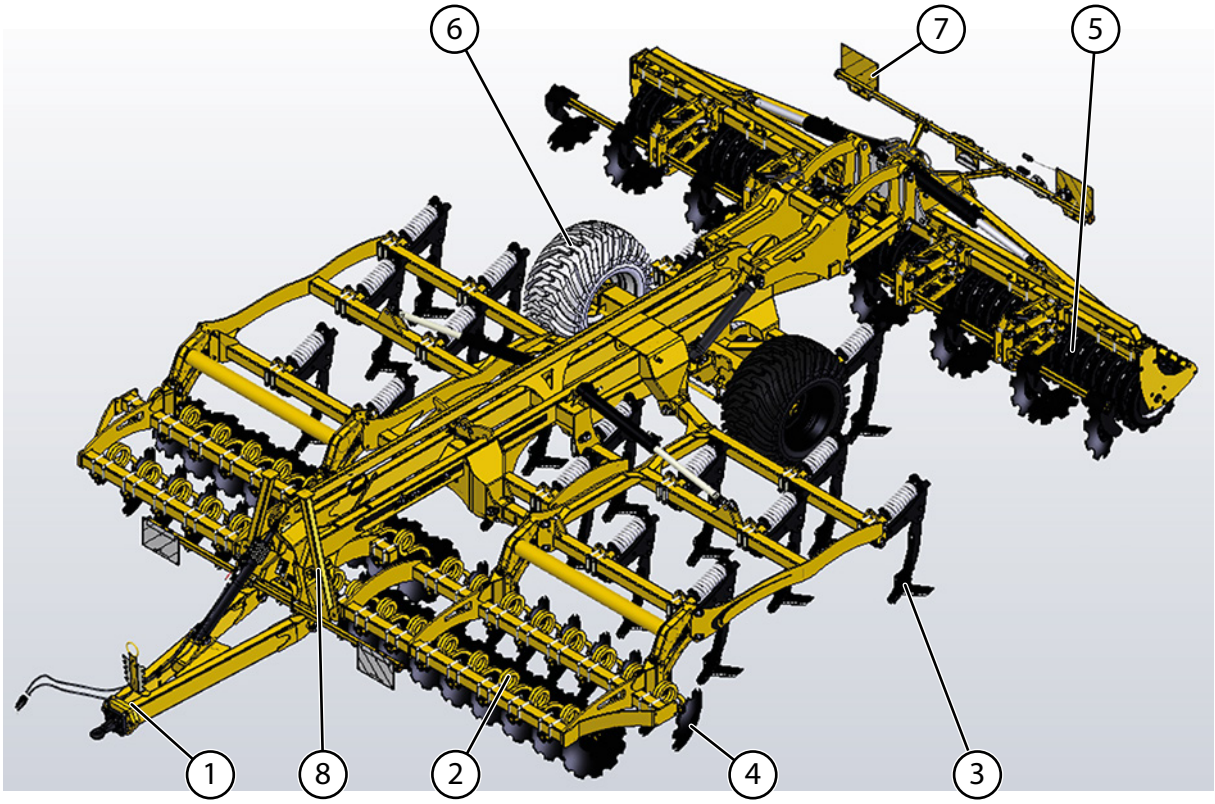

NOTT-0388

Fig. 6

No.	Description
1	Hitch
2	3D suspension
3	Blades
4	Mulcher discs
5	Rollers
6	Transport wheels
7	Signalling lights and panels
8	Parking support leg

3. Identification

3.1. Validity of the user manual

This user manual is valid for the following machines.

Machine	Type	Serial number	
		From	A
Maximulch	Series 3 folding trailed		-
Maximulch	Series 3 fixed tractor-mounted		-
Maximulch	Series 5 fixed trailed		-
Maximulch	Series 5 folding trailed		-
Maximulch	Series 6 folding trailed		-

IMPORTANT

This user manual is published for wide circulation and the availability of the equipment indicated, whether on the basic machine or as accessories, may vary according to the region in which the machine is used. All combinations available at the time of publishing the manual will be described therein.

3.2. Location and description of data plate

3.2.1. Tractor-mounted machines not type-approved for road use

The data plate is located on the lower hitching beam.

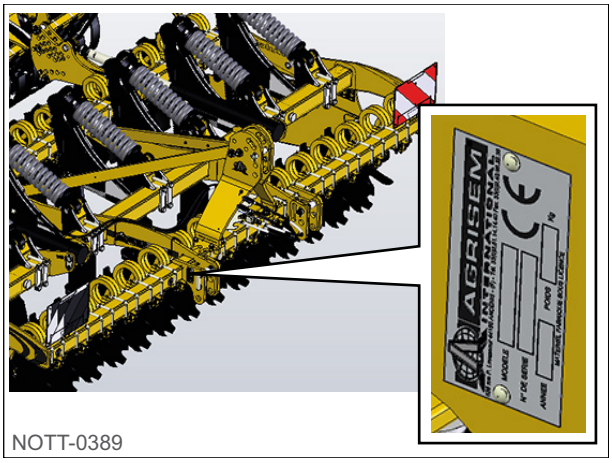

Fig. 7

The data plate includes the following information:

No.	Description
1	Model
2	Serial or identification number
3	Year of manufacture
4	Empty weight of the equipment

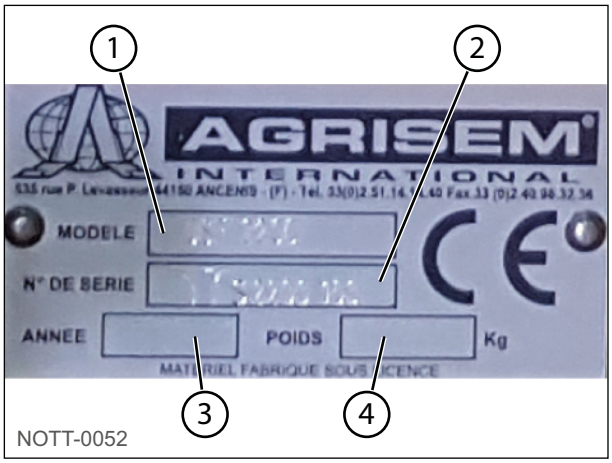

Fig. 8

3.2.2. Trailed machines type-approved for road use

The data plate is located on the front frame.

- Series 3

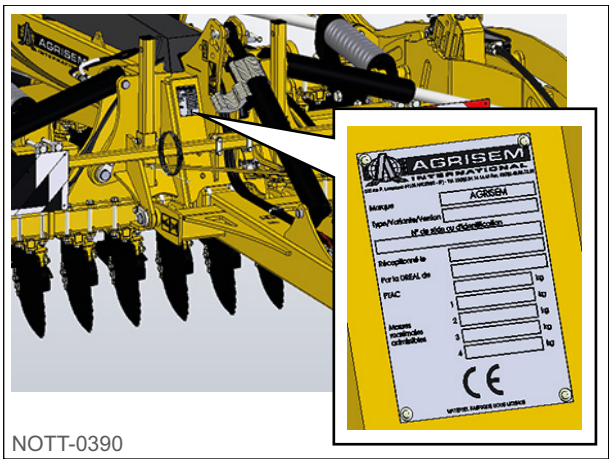

Fig. 9

- Series 5

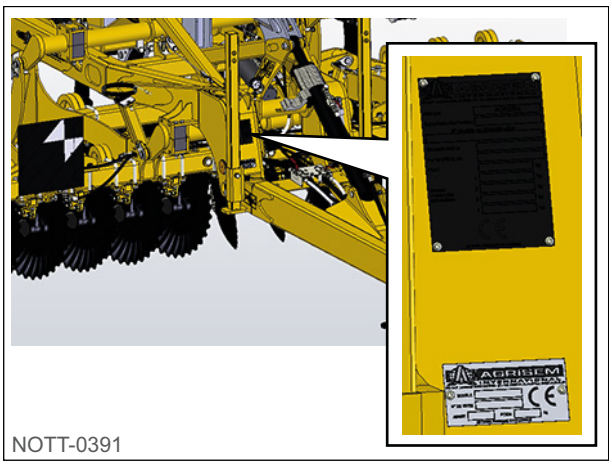

Fig. 10

- Series 6

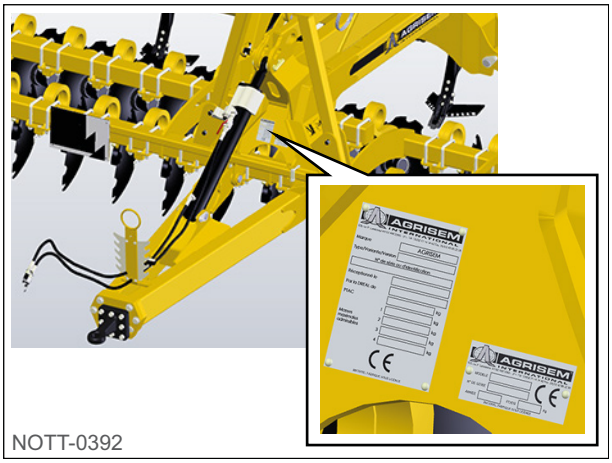

Fig. 11

The data plate includes the following information:

No.	Description
1	Make
2	Type / variant / version
3	Serial or identification number
4	Date of approval
5	Issuing authority (DREAL)
6	Gross vehicle weight
7	Unladen weight
8	Not used
9	Not used
10	Max. weight on drawbar eye

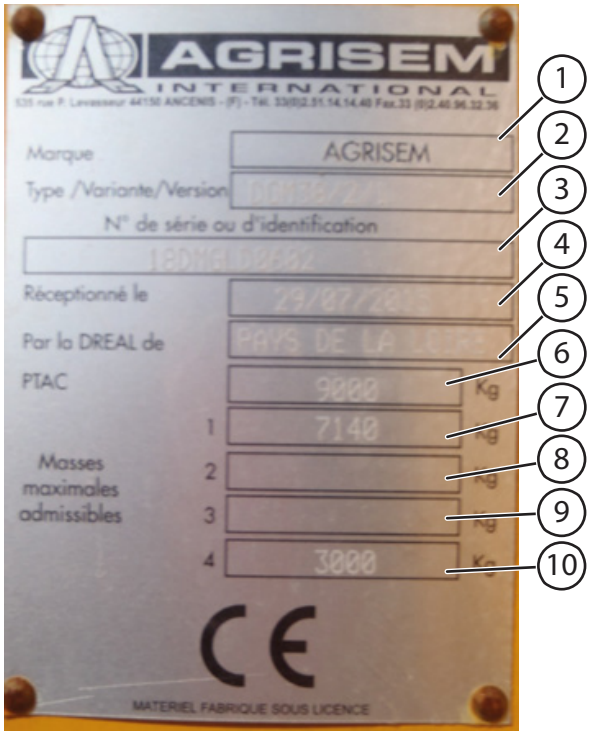

NOTT-0243

Fig. 12

3.2.3. Description of the identification number

The identification number is made-up of the following elements.

No.	Description
1	World Manufacturer Identifier (WMI) code
2	Vehicle description section (VDS) code
2a	Machine family
2b	Type of brake
3	Vehicle identification section (VIS) code
3a	Year of manufacture
3b	Place of manufacture
3c	Manufacturing number
3d	Width of machine
3e	Incrementation

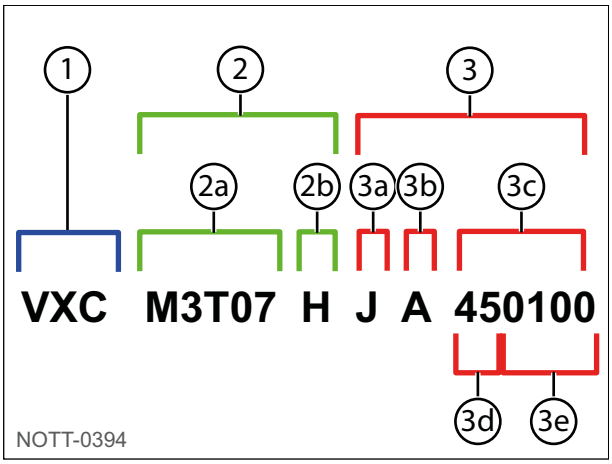

Fig. 13

The example opposite is therefore the identification number of a Maximulch Series 3 trailed cultivator with hydraulic braking manufactured in 2018 by AGRISEM INTERNATIONAL and 4.5 m wide.

3.3. Identification of the machine

On receipt of the machine, please enter the corresponding information below:

Information	Fill-in the column with the requested information
Type of machine	.....
Serial number	.....
Year of manufacture	.....
Date of first use	.....
Name of the dealer	.....
Dealer's address	....
Dealer's telephone number	.....

AGRISEM INTERNATIONAL S.A.

535 Rue Pierre Levasseur

CS 60263

44158 ANCENIS - France

Tel.: +33 (0)2.51.14.14.40 – Fax: +33 (0)2.40.96.32.36

E-mail: agrisem@agrisem.com

IMPORTANT

This document should be kept inside this user manual.

4. Warranty

4.1. Warranty conditions

NOTE

Return the warranty certificate within 15 days together with a copy of the invoice (without these documents the warranty procedure cannot be implemented).

The warranty conditions applicable to machines fitted exclusively with original parts from AGRISEM INTERNATIONAL are as follows:

By selling new products to its dealers, the manufacturer provides a guarantee according to which, subject to certain conditions, the goods are free of material or workmanship defects. The purchasers of new AGRISEM INTERNATIONAL equipment shall request all necessary information from the dealer having supplied them the equipment.

As part of its policy of constant improvement of its products, the manufacturer reserves the right to change the characteristics of its equipment without notice and accepts no liability in the event of possible differences between the characteristics of its products and the description of said products in its publications.

4.1.1. Duration

If a defect is observed on a structural part within a period of 12 months as from the date of delivery of the machine, and if this defect is due to faulty raw materials, or its manufacture at the factory. The parts alleged to be faulty must be returned to the Company's address for expert inspection:

AGRISEM INTERNATIONAL S.A. – 535 Rue Pierre Levasseur – CS 60263 – 44158 ANCENIS - France
Tel.: +33 (0)2.51.14.14.40 – Fax: +33 (0)2.40.96.32.36

The following shall be considered to constitute proof of the date of delivery of the equipment:

- the date of the delivery note and the purchaser invoice date.
- the return of the warranty certificate (stamped and signed by the dealer and the purchaser) within 15 days of the delivery of the equipment.

4.1.2. Machines and parts concerned

For the purposes of this warranty, the term “Machine” is exclusively used to designate machines and parts manufactured by AGRISEM INTERNATIONAL. (It does not include external components, in particular tyres, hydraulic hoses, etc. even though these parts are also supplied by the company)

NOTE

The warranty is void if any modifications have been made to the machine without the formal approval of AGRISEM INTERNATIONAL or if parts other than those manufactured by the company have been fitted (e.g. counterfeit wear parts).

4.1.3. Scope of the warranty

The warranty is limited to the reimbursement or repair of parts accepted as faulty with regard to their raw materials or machining, in our factories and by our Technical Departments.

Any costs associated with the dismantling and replacement of the faulty part are not covered by the warranty. The costs of transporting machines or machine parts to the place of repair and their return to their owner are also not covered.

Wear parts are not covered by the warranty.

4.1.4. Preconditions

The machine must be maintained and used in accordance with the instructions in this user manual.

All of the safety measures described in the user manual and in the manuals of any additional equipment must be complied with.

All protection and safety components are to be inspected regularly and replaced if necessary, including cylinders, hydraulic hoses, spring and turbo safety devices. refer to the chapters “Safety instructions” and “Servicing - Maintenance”.

The warranty is only applicable if the customer has complied with the general obligations of the contract and, in particular, the payment terms.

4.1.5. Pre-delivery inspection

When supplying a machine, the dealer is required to perform a number of operations. These involve, firstly, a complete inspection of the machine prior to delivery so that the machine is supplied ready for immediate use. They also involve providing comprehensive training to the purchaser regarding the basic principles of machine operation and servicing. This training covers the instruments and controls, routing servicing and safety instructions. All those who will be involved in the use and the servicing of the machine are required to attend this training.

4.1.6. Warranty exclusions

The warranty will not apply:

- If the faults are due to normal wear, incorrect use, lack of maintenance, inadequate monitoring or negligence.
- If the machine is damaged by an accident or develops a fault due to being used for purposes other than those specified by AGRISEM INTERNATIONAL.
- In the event of improper use of the machine. Please refer to the chapter “Intended use of the equipment”, page 9 regarding this point.
- If the manufacturer's instructions and requirements given in this manual are not complied with, particularly those regarding safety, assembly, start-up, use, operation and servicing.
- In the event of improper handling on the part of the user.
- Causes due to the passage of foreign bodies.
- In the event of damage due to the machine being combined with other machines or instruments without the prior written agreement of AGRISEM INTERNATIONAL, and/or without complying with the instructions given by the manufacturers of the tractor and other instruments or machines.
- In the event that the machine is used with improperly attached or non-functioning protection and safety devices.
- If the machine has been modified without prior written permission from AGRISEM INTERNATIONAL, or if spare parts, accessories or equipment have been fitted to the machine which were not recommended by AGRISEM INTERNATIONAL.
- In the event of non-compliant repair.
- In the event of damage during transport or handling by a carrier. The recipient shall be responsible for taking any corrective action against the carrier.
- The harmful consequences of the immobilisation of the instrument due to a fault or incident on the machine are not covered by the warranty.
- Personal injury to the owner or a third party and the indirect consequences resulting therefrom are not covered by the warranty.

Moreover, AGRISEM INTERNATIONAL shall not be liable for the payment of compensation for any reason whatsoever in the event of the loss of crops or any damage whatsoever due to a fault, hidden defect or machine breakdown.

The purchaser is always responsible for the choice of product and the suitability of the machine for the result it is wished to obtain. The purchaser is responsible for its correct use in line with good professional practice and the regulations.

Under no circumstances will AGRISEM INTERNATIONAL have any obligation with regard to the final result.

4.1.7. Limitations and liability

The warranty cannot be assigned or transferred to any other person without the prior written permission of AGRISEM INTERNATIONAL.

Under no circumstances do those selling our machines have the right or power to make any decision whatsoever, either express or tacit, in the company's name.

The technical assistance given by the company or its representatives with the repairing or operation of equipment does not make it liable for any costs and in no way alters or leads to the waiving of the conditions of this warranty.

4.1.8. Warranty enforcement procedure

TO BE STRICTLY ADHERED TO BY THE DISTRIBUTOR AND BY THE PURCHASER

The warranty's enforcement is subject to strict compliance by the dealer and the user with the following requirements:

1 - Returning by the dealer of the warranty certificate duly completed and signed by the dealer and the purchaser.

2 - Claims must be made without fail using an AGRISEM INTERNATIONAL "WARRANTY CLAIM FORM" (see appendix) and sent by registered letter with acknowledgement of receipt by the dealer to the company's technical department within 10 days of the incident. This form must be completed legibly by the dealer and must include the following information:

- Name and address of the dealer, code No.,
- Name and address of the purchaser,
- Type of machine,
- Working width,
- Machine serial number,
- Date of delivery to purchaser,
- Date of breakdown,
- Precise references of the parts replaced, No. and date of invoice,
- Make and model of tractor used,
- Detailed description and alleged cause of the incident.
- Surface worked with the Disc-O-Mulch,
- Utilised agricultural area of the farm,
- Type of soil % clay,
- Proof of wear part invoice,
- Stones (yes/no),
- Parts replaced (yes/no) (send the photocopy of the invoice).

3 - Allegedly faulty parts are to be returned by the dealer to the company's address for an expert inspection, together with the copy of the warranty claim form provided for this purpose. The dealer must order the faulty part from the spare parts department. Any transport costs incurred by the returning of said parts are payable by the sender.

4 - The final decision regarding payment under the terms of the warranty shall be made by the company's technical or general management. Whatever the reason for the warranty claim, this decision is final and irrevocable and the purchaser undertakes to accept this decision both with regard to the fault and the replacement of the part or parts.

Under no circumstances are the company's salespersons authorised to make such a decision, which would be deemed null and void.

NOTE

In the event of refusal, the part remains at the customer’s disposal for eight days. After this time it will be disposed of with no appeal possible.

Under no circumstances do those selling our machines have the right or power to make any decision whatsoever, either express or tacit, in the Company's name.

4.1.9. Warranty extension

If the customer subscribes to the warranty extension, please see this agreement for the terms and conditions of the enforcement of this warranty extension.

4.2. Exclusive liability clause

AGRISEM INTERNATIONAL accepts no liability for damages (and any related indirect consequences) resulting from one or more of the following causes:

- Non-compliant use of the machine.
- Failure to follow the manufacturer's instructions given in this manual, particularly those regarding safety, assembly, start-up, use, operation and servicing.
- Improper assembly, start-up, use and maintenance of the machine.
- Use of the machine with faulty protection and safety devices or safety and protection devices that are incorrectly installed or not working.
- Combining of the machine with other instruments or machines without the written agreement of AGRISEM INTERNATIONAL and/or without complying with the instructions given by the manufacturers of the tractor and the other instruments or machines.
- Modifications made to the machine without the written permission of AGRISEM INTERNATIONAL.
- Fitting of spare parts, accessories or equipment on the machine which are not genuine or which have not been recommended by AGRISEM INTERNATIONAL.
- Failure to monitor the wear parts on the machine.
- Use of the machine other than for the purposes specified by the manufacturer.
- Non-compliant repair and maintenance.
- Catastrophes resulting from the presence of foreign bodies, unforeseeable circumstances and cases of force majeure.

Moreover, AGRISEM INTERNATIONAL cannot be held liable for injury to the owner or a third party or for the indirect consequences of such an injury, whether or not it results from a fault. You are also reminded that a safe distance of 50 m must be maintained around the machine.

Any claim for compensation for damage that did not occur directly on the machine is excluded.

AGRISEM INTERNATIONAL cannot be held liable for damage caused by driving or use errors.

AGRISEM INTERNATIONAL cannot be held liable for compensation for the consequences of the instrument's immobilisation due to a fault or an incident on the machine.

5. Safety instructions

5.1. Safety instructions

5.1.1. Introduction

The instructions in this user manual must be read and understood before the machine is used for the first time.

This user manual is published for wide circulation and the availability of the equipment indicated, whether on the basic machine or as accessories, may vary according to the region in which the machine is used.

Always consult the dealer/retailer if you do not understand any part of this manual. It is important that you understand and observe these instructions.

The safety instructions given in this chapter are in addition to those given in other chapters of this manual.

The machine is used in conjunction with an agricultural tractor. Only careful reading of the user manuals of both items of equipment (tractor + machine/tool) will ensure the complete safety of property and people when working.

Most accidents which occur during work, maintenance or travel from one place to another are due to a failure to observe the most basic safety rules. It is therefore essential for anyone likely to be working with this machine to strictly adhere to the basic rules set out below and to the safety instructions displayed on the stickers affixed to the machine.

This machine has been designed for a specific task. It must always be in good working order and must only be repaired using AGRISEM INTERNATIONAL OEM parts.

This machine must be used, maintained and repaired only by competent persons who are familiar with its features and its operating procedures and who are aware of the accident prevention safety rules and the hazards to which they may be exposed.

This machine must only be used in accordance with its purpose and in a condition that does not present any safety risks. Any malfunctions likely to be detrimental to safety must be corrected immediately.

The user is required to strictly adhere to the safety instructions in this manual and the stickers affixed to the machine. The safety panels and guards have been omitted from some illustrations in this manual for the sake of clarity. Never use the machine if these items are not installed. If any of these items have been removed to carry out a repair, they must be reinstalled before operation.

The user is also required to strictly comply with the current legislation with regard to accident prevention, safety at work (labour code), occupational medicine, highway legislation and waste treatment.

Before using the machine for the first time, read all of the safety instructions in this user manual carefully and familiarise yourself with the controls.

The machine must never be entrusted to a person who is not trained to use it.

Liability and warranty

In addition to the other cases mentioned in this manual, the manufacturer denies any liability for any injury or damage to equipment resulting from one or more of the following causes:

- Failure to follow the manufacturer's instructions given in this manual, particularly those regarding safety, assembly, start-up, use, operation and servicing.
- Non-compliant use of the machine.
- Improper assembly, start-up, use and maintenance of the machine.
- Use of the machine with faulty protection and safety devices or safety and protection devices that are incorrectly installed or not working.
- Combining of the machine with other instruments or machines without the written agreement of AGRISEM INTERNATIONAL and/or without complying with the instructions given by the manufacturers of the tractor and the other instruments or machines.

List of compatible AGRISEM INTERNATIONAL machines

- Combiplow: Disc-O-Mulch / Maximulch / Actimulch
- DSF: Disc-O-Mulch / Maximulch / Actimulch
- DSA: Disc-O-Mulch / Maximulch / Actimulch
- DS500/200: Disc-O-Mulch / Maximulch / Actimulch

- Modifications made to the machine without the written permission of AGRISEM INTERNATIONAL.
- Fitting of spare parts, accessories or equipment on the machine which are not genuine or which have not been recommended by AGRISEM INTERNATIONAL. Spare parts are available via the online spare parts catalogue (accessible via http://parts.agrisem.com/) or through your approved customer service network.
- Failure to monitor the wear parts on the machine.
- Use of the machine other than for the purposes specified by the manufacturer.
- Non-compliant repair and maintenance.
- Catastrophes resulting from the presence of foreign bodies, unforeseeable circumstances and cases of force majeure.

Similarly, in addition to the other cases referred to in this manual, any claim under the warranty relating to damage resulting from one or more of the above-mentioned causes shall be excluded.

5.1.2. Instructions to be followed before using the machine

Wear close-fitting clothes. Loose clothing may become caught in moving parts.

Wear the appropriate personal protective equipment (PPE) for the tasks to be performed (gloves, shoes, goggles, helmet, ear protection, etc.).

Be aware that tillage equipment, even if not very wide, has very sharp parts (blades, shares, discs, etc.) which can cause serious injury in the event of an accident.

Operate the controls with care.

Before each use, check the area around the machine, no-one must be within 50 metres of the machine. Check that there is sufficient visibility to ensure this condition of use.

Before carrying out any work, ensure that weight distribution on the tractor ensures a stable assembly. The tractor must be sufficiently ballasted at the front to avoid any risk of the front lifting. If not, add weights to the front of the tractor.

Check before each use that screws, nuts and bolts are correctly tightened in accordance with the maintenance operation described in this manual. Re-tighten if necessary.

No-one must be within 50 metres of the machine during folding and unfolding operations.

Check that the machine is correctly hitched.

Always install the pins and locking systems.

Check that the machine meets personal safety requirements.

Whenever you use the machine, check that the safety and protection devices (safety devices, emergency stop, wheel chock, extinguisher) are in place and working. Replace any worn or damaged safety guards immediately.

Move any people or animals likely to be in the area where the machine is being manoeuvred or used. A 50-metre safety zone must be kept clear around the machine.

Go around the machine looking for any external damage and checking the condition of the protection devices. The protection devices must be clean, legible and in good condition. If this is not the case, contact the AGRISEM INTERNATIONAL customer service department in order to replace them.

Only persons authorised by the owner of the machine and who have been trained and instructed are allowed to work on and with this machine. The operator is liable towards third parties while working on and with the machine.

Do not use the machine on very uneven or steeply sloping ground.

Do not use the machine in the event of thunderstorms and lightning.

The owner of the machine must:

- Provide the operator with the user manual.
- Ensure that the operator has read it and understands it.
- Ensure that the operator knows the basic instructions regarding safety at work and accident prevention.

Immediately disinfect any cut or injury that comes into contact with the products contained in the machine.

5.1.3. Instructions to be followed for hitching and unhitching

Ensure good compatibility of the tractor-to-machine hitching device. Only combine equipment that is compatible (machine and tractor). If in doubt, contact the AGRISEM INTERNATIONAL customer service network .

Check that the tractor has the characteristics necessary to hitch the machine (see “Characteristics”, page 118.

WARNING

Use of a tractor that is non-compliant with the machine to which it is attached will incur the following risks:

- Coupling failure
- Instability under load
- Instability during manoeuvring
- Insufficient braking capacity

Check that the tractor meets the necessary requirements before installing or hitching the machine.

The machine must only be mounted on or hitched to a tractor that meets the necessary requirements.

Perform a braking test to check that the tractor can provide the regulatory deceleration power even with the machine mounted or hitched.

Refer principally to the tractor user manual, the reference below are for guidance only.

Data needed for calculation

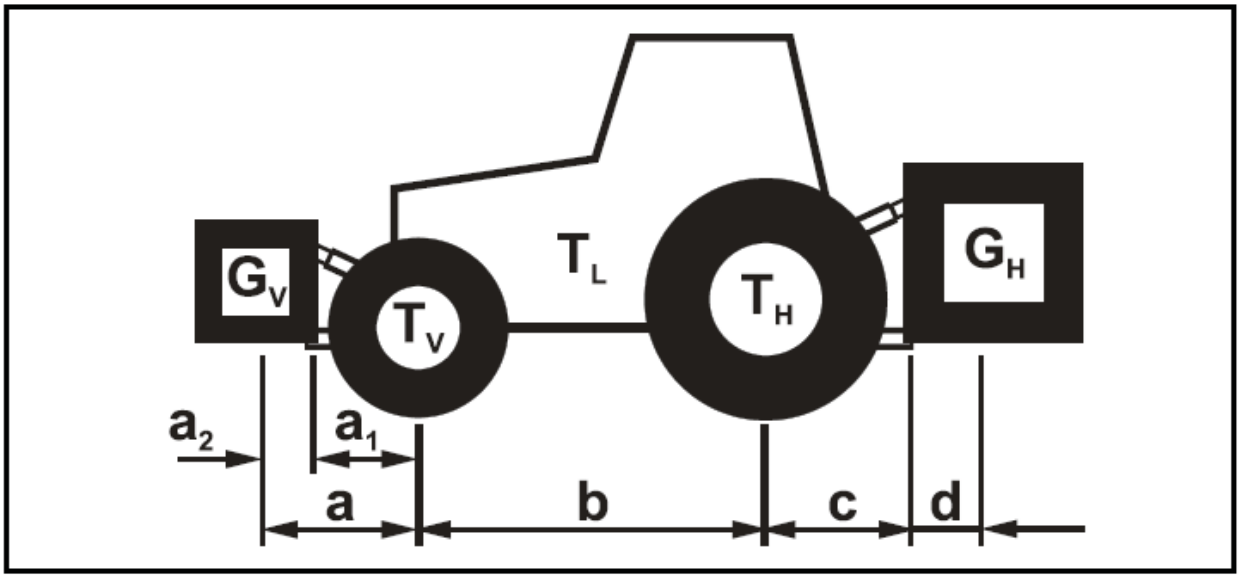

NOTT-0222

Fig. 14

No.	Unit	Description	Comment
T_L	[kg]	Empty weight of tractor	see the tractor's user manual or registration papers
T_V	[kg]	Front axle load of the empty tractor	
T_H	[kg]	Rear axle load of the empty tractor	
G_H	[kg]	Total weight of rear-mounted machine or rear ballast	See technical characteristics of the machine or the rear ballast
G_V	[kg]	Total weight of front-mounted machine or front weight	see technical characteristics of the front-mounted machine or front ballast
a	[m]	Distance between the centre of gravity of the front-mounted machine or front ballast and the centre of the front axle (sum of $a_1 + a_2$)	see technical characteristics of the tractor and the front-mounted machine or front ballast, or measurement
a_1	[m]	Spacing between the centre of the front axle and the centre of lower arms' hitch point	see the tractor's user manual, or measurement
a_2	[m]	Distance between the centre of the lower arms' hitch point and the centre of gravity of the front-mounted machine or front ballast (distance from the centre of gravity)	see technical characteristics of the front-mounted machine or front ballast, or measurement
b	[m]	Wheel base of the tractor	see the tractor's user manual or registration papers or measurement

No.	Unit	Description	Comment
c	[m]	Spacing between the centre of the rear axle and the centre of lower arms' hitch point	see the tractor's user manual or registration papers or measurement
d	[m]	Distance between the centre of the lower arms' hitch point and the centre of gravity of the rear-mounted machine or rear ballast (distance from the centre of gravity)	see technical characteristics of the machine

Calculation of the required minimum ballasting at the front $G_{V\ min}$ of the tractor to ensure manoeuvrability

Enter the value for the calculated minimum ballast ($G_{V\ min}$) required on the front of the tractor in the table on page 31.

$$G_{V\ \min} = \frac{G_H \bullet (c+d) - T_V \bullet b + 0{,}2 \bullet T_L \bullet b}{a+b}$$

NOTT-0223

Fig. 15

Calculation of the actual front axle load of the tractor $T_{V\ tat}$

Enter the value for the calculated actual front axle load and the permissible tractor front axle load specified in the tractor user manual in the table on page 31.

$$T_{V\ tat} = \frac{G_V \bullet (a+b) + T_V \bullet b - F_H \bullet c}{b}$$

NOTT-0224

Fig. 16

Calculation of the actual total weight of the combined tractor and machine

Enter the value for the calculated actual total weight and the authorised total tractor weight specified in the tractor user manual in the table on page 31.

$$G_{tat} = G_V + T_L + F_H$$

NOTT-0225

Fig. 17

Calculation of the actual rear axle load of the tractor $T_{H\ tat}$

Enter the numeric value for the calculated actual rear axle load and the approved tractor rear axle load specified in the tractor user manual in the table page 31.

$$T_{H\ tat} = G_{tat} - T_{V\ tat}$$

NOTT-0226

Fig. 18

Load capacities of the tyres

Enter the double value (two tyres) of the permissible load capacity (see for example the tyre manufacturer's documents) and enter the result in the table on page 31.

Table

	Actual value obtained by calculation		Authorised value according to the tractor user manual		Double the permissible load capacity of the tyres (two tyres)
Minimum ballast front / rear	/ kg	≤	--		--
Total weight	kg	≤	kg		--
Front axle load	kg	≤	kg	≤	kg
Rear axle load	kg	≤	kg	≤	kg

NOTE

Refer to the tractor's registration documents to obtain the authorised values for the total weight, axle loads and tyre load capacities.

The calculated actual values must be less than or equal to (≤) the authorised values.

WARNING

Risk of crushing, cutting, entanglement, entrapment and impact through insufficient stability of the tractor under load and insufficient tractor manoeuvrability and braking power.

It is forbidden to couple the machine to the tractor used as the basis for calculation if:

- even if one of the actual, calculated values is greater than the authorised value.
- there is no front weight (if required) attached to the tractor corresponding to the minimum required front ballast ($G_{V\ min}$).

Ballast the tractor with a front or rear weight when the tractor's axle load is exceeded on only one axle.

Special cases

If the minimum required ballast at the front ($G_{V\ min}$) is not obtained with the weight of the front-mounted machine (G_V), you must use ballast weights in addition to the front-mounted machine.

If the minimum required ballast at the rear ($G_{H\ min}$) is not obtained with the weight of the rear-mounted machine (G_H), you must use ballast weights in addition to the rear-mounted machine.

Immobilising the tractor / machine

WARNING

Accidents involving crushing, shearing, cutting, tearing, entanglement, winding, entrapment or impact may occur when working on the machine in the following cases:

- accidental lowering of a non-immobilised machine, raising of the tractor's three-point hitch via the hydraulic circuit.
- accidental lowering of raised, non-immobilised components of the machine.
- accidental start-up and movement of the combined tractor-machine.

Before carrying out any operations on the machine, take all necessary measures to prevent any accidental start-up or movement of the combined tractor-machine.

Operations performed on the machine, e.g. fitting, adjustment, troubleshooting, servicing and repair, are prohibited:

- if the machine is running,
- while the tractor's engine is running with a connected transmission shaft / hydraulic system,
- when the ignition key has not been removed and the tractor's engine with a connected transmission shaft / hydraulic system can be accidentally started,
- when the tractor and machine are not immobilised with their respective parking brakes and/or chocks,
- when moving parts are not blocked against accidental movement.

These operations in particular carry a risk of contact with non-immobilised components.

Lower the machine / parts of the machine that are raised and not immobilised.

The way to avoid any accidental lowering is as follows:

1 - Switch off the tractor engine,

2 - Remove the ignition key,

3 - Apply the tractor's parking brake.

4 - Immobilise the machine (only for a hitched machine):
  - on a flat surface using the parking brake (where applicable) or chocks,
  - on sloped or uneven ground using the parking brake and chocks.

The requirements relating to the tractor include:

- the authorised total weight (including ballasting),
- the authorised axle loads,
- the authorised vertical load on the tractor coupling point,
- the permissible load capacities of the tyres mounted on the tractor,
- sufficient authorised load on the coupling point,
- the Power Take-Off (PTO) sleeves (6/21 splines),
- the compatibilities of the hitching devices,
- the load capacities of the tyres.

This information is shown on the data plate or in the vehicle's registration papers and in the tractor user manual. If it is missing, contact the tractor customer service network in order to confirm this information.

The front axle must systematically support at least 20 % of the tractor's empty weight. Refer to the tractor user manual for further details.

Calculating the actual values for the total tractor weight, tractor axle loads and load capacities, as well as the minimum ballast required

The total authorised weight of the tractor indicated in the vehicle’s registration papers must be greater than the sum of:

- the tractor's empty weight,
- the ballast
- the total weight of the mounted machine or the vertical load of the hitched machine.

This instruction only applies in Germany:

If the axle loads and/or the total authorised weight are not complied with after all the possibilities have been exhausted, the competent authority according to the law of the Land may issue a waiver based on the report of an approved expert in the field of motor vehicle circulation and with the agreement of the manufacturer, in accordance with article 70 of the German law governing the authorisation of vehicles to use the public highway, and the obligatory authorisation under the German highway code.

Combining of machines: do not combine machines that are incompatible or are incompatible with the tractor when combined.

List of compatible AGRISEM INTERNATIONAL machines

- Combiplow: Disc-O-Mulch / Maximulch / Actimulch
- DSF: Disc-O-Mulch / Maximulch / Actimulch
- DSA: Disc-O-Mulch / Maximulch / Actimulch
- DS500/200: Disc-O-Mulch / Maximulch / Actimulch

AGRISEM INTERNATIONAL accepts no liability in the event of damage resulting from a combination of machines that has not been authorised in writing by AGRISEM INTERNATIONAL.

Accidents linked to the failure of components during operation may result from unauthorised combinations of hitching equipment.

Hitching and unhitching operations involve a risk of injury.

Before hitching or unhitching

- Place the machine on stable ground..
- Lower the pressure in all hydraulically controlled systems.
- Before climbing down from the tractor, take all of the necessary measures to avoid the accidental movement of the tractor.
- Chock the machine and take all of the necessary measures to avoid the accidental movement of the machine.

The machine must only be hitched to the hitching points provided for this purpose and in accordance with the applicable rules.

5.1.4. Instructions to be followed when using the machine

WARNING

A failure to take movement or operating safety measures may result in accidents involving crushing, cutting, entanglement, entrapment or impact.

Before start-up, check that the machine and the tractor are able to move and operate in complete safety.

Never climb onto the machine or stand on it when it is moving.

Never work in reverse.

Never allow children to climb on the tractor or the machine, or to play near the equipment, even if the machine is stopped.

When using or manoeuvring the machine ensure that no-one is within the manoeuvring or working area. A 50-metre safety zone must be kept clear around the machine.

The elements of the machine that are controlled by an external force have crushing and shearing zones. Keep away from these hazardous areas.

Be aware of hidden obstacles (stones, roots, pipes, cables, etc.). In the event of a collision with an obstacle, you must stop the drive, switch off the tractor engine, remove the ignition key and wait for the machine to come to a complete stop. Some parts may have inertia, wait 5 minutes after switching off the ignition before working on the machine. Before resuming work, check the machine for any damage.

If the obstacle is an electric cable or gas pipe, inform the appropriate authorities.

When using the machine, stones or other foreign objects are likely to be thrown a considerable distance. A 50-metre safety zone must be kept clear around the machine.

Move any people or animals likely to be in the danger area around the machine.

Do not stand in the machine's working area nor in the machine's rotation or swivel area.

Each time the machine is used, carry out a careful visual inspection of the machine to detect any external damage and ensure the correct operation of safety and protection devices. Also carry out regular inspections of the various adjustments. The protection devices must be clean, legible and in good condition.

Do not use the machine on very uneven or steeply sloping ground.

Do not use the machine in the event of thunderstorms and lightning.

With regard to driving

Adapt your driving to ensure that you are in control of the tractor with the machine mounted or hitched under all circumstances.

Take into account your personal faculties, the conditions of the ground or road, the traffic, visibility and weather, the tractor’s driving characteristics and the conditions of use when the machine is mounted or hitched.

Ensure that the rules of safety and caution dictated by each situation are observed in respect of the applicable regulations.

The speed and driving style must always be appropriate to the ground, roads and tracks.

Reduce your speed on uneven ground or tight corners.

On bends, take into account the overhang and the inertia of the mounted tool.

Avoid sudden changes of direction at all times.

Do not leave the driver's seat until the equipment has come to a complete stop, the engine is switched off and the parking brake is on.

Do not transport any people or animals on the machine and the additional tools during work or transport.

When driving on the public highway

Observe with the highway code applicable in your country.

Before going out onto the public highway, check the dimensions of the machine and unbolt or remove elements that exceed its regulatory dimensions.

Take into account the widths authorised for transport and the transported height depending on the hitched machine, in line with current legislation.

Take account of a higher centre of gravity with a vertically folding machine. The stability of the whole unit will be different in the folded up position and the folded out position and you should adapt your driving accordingly.

Before setting off on the road, ensure that the hitched machine is fitted with the lighting and signalling devices required by the highway code and any other devices required by the current regulations.

AGRISEM INTERNATIONAL rear signalling lights and panels may be removed when working. Check that this signalling equipment has been correctly refitted before driving on the road.

Check that the equipment is clean and in good working order. Replace any missing or damaged equipment before driving on the road.

Users must not consume alcohol, medication or any other products that will affect their faculties of perception, leading to a loss of alertness or coordination. A user who takes prescription or non-prescription drugs should seek medical advice regarding their ability to safety operate a machine.

Before travelling on the road, secure all of the machine's pivoting parts in their transport position to avoid dangerous changes of position. Also check that the screws, nuts and bolts are tightened and that all of the machine parts are correctly attached and cannot move or become detached.

If the machine is a folding machine, the locking system must be engaged.

Follow the instructions in this manual on how to prepare the machine for transport.

If necessary, also check:

- the connection of the supply pipes,
- the braking system and the hydraulic circuit.

Ensure that no movement can be made involuntarily.

If the equipment does not already have them, fit signalling devices: lighting board, reflectors, reflective plates or adhesive strips. The signalling devices must be clean, legible and in good condition. If this is not the case, contact the AGRISEM INTERNATIONAL customer service department in order to replace them.

Ensure that the machine or additional equipment does not hide the tractor’s lights.

Ensure that the inflation pressure of the tractor tyres is correct and suitable for the situation.

Never drive at more than 25kph when under load.

Clean off any soil stuck to the machine before taking to the road.

After using the public highway, ensure that the road is cleaned of any mud left by the tractor and tools.

The driver/owner has sole responsibility when transporting the machine on the public highway. Always abide by the applicable regulations and legislation.

5.1.5. Instructions to be followed when performing operations on the machine

These instructions in particular relate to cleaning, servicing and repair operations.

Follow the recommendations relating to the maintenance of the machine contained in this user manual.

Before carrying out any work on the machine

Before carrying out any work on the machine, ensure that it cannot be accidentally started.

- Take care to ensure that the machine is placed on stable ground.

- Switch off the tractor engine, remove the ignition key, wait for all of the moving parts to come to a stop and engage the hand brake.
- Set the machine on the ground, depressurise the hydraulic circuit and allow the machine to cool down.
- Secure the machine or elements that are in a raised position to avoid any accidental lowering.
- Chock the machine.

If using a high-pressure washer or steam cleaner, it is essential to comply with the following points:

- Do not clean the electrical and hydraulic components.
- Never direct the high-pressure washer or steam cleaner nozzle directly at the lubrication points or bearings.
- Systematically keep the nozzle a reasonable distance from the machine.
- Comply with the rules for using high-pressure washers.

Wear appropriate personal protective equipment for the work to be performed. In particular, wear safety shoes and gloves to handle sharp parts.

Take all of the necessary precautions when fitting working parts that are both heavy and sharp.

The machine must be used, serviced and repaired only by competent persons who are familiar with the machine's features and operation.

The machine must only be repaired with original AGRISEM INTERNATIONAL parts.

Protect bare metal parts using either thick grease or an anti-rust product that leaves a greasy film.

According to the type of machine: before carrying out any work on the electrical circuit or before any welding operations, disconnect the wiring harnesses coming from the tractor. Disconnect the battery and alternator cables.

5.1.6. Do not weld or use blow torches near pressurised fluids or inflammable products. Instructions regarding installation

The machine may be fitted with electronic components and elements which may be affected by electromagnetic emissions from other devices. This type of interference may be a source of danger for people if the following safety instructions are not followed:

- If electrical components and/or devices are installed on the machine and connected to the on-board electrical circuit at a later date, the user must first check that installing these items will not interfere with the vehicle's electronics or other components.
- Ensure that electrical and electronic components subsequently installed comply with the current version of electromagnetic compatibility directive 2004/108/EEC and that they have a CE marking.

Before carrying out any work on the electrical system, disconnect the battery's negative terminal.

Only use the recommended fuses. Using fuses of unsuitable capacity may damage the electrical system and create a risk of fire.

Always comply with the safety rules for carrying out work on a machine fitted with a battery. Refer to the user instructions of the machine concerned for more details.

5.1.7. Instructions regarding the hydraulic system

If your machine is fitted with a hydraulic circuit, the following instructions must be followed:

The machine is powered by pressurised hydraulic energy. Working on a pressurised circuit may give rise to risks of injury by contamination. All operations must be carried out by professionals trained to handle hydraulic technical equipment.

Contact the AGRISEM INTERNATIONAL customer service department for the replacement of any hydraulic components.

Mark the sockets and connectors of the hydraulic connections between the tractor and the machine to avoid handling errors. Refer to “Operation”, page 48 for more details.

Before connecting a hose to the tractor's hydraulic circuit, ensure that the circuits on both the tractor side and the machine side are perfectly clean and not under pressure.

Before carrying out any work on the hydraulic circuit, lower the machine, depressurise the circuit, switch off the tractor engine, engage the parking brake and remove the ignition key.

Allow the machine to cool before carrying out any work.

Check the hydraulic hoses regularly. Damaged or worn hoses must be replaced immediately. Visually examine the hydraulic hoses to detect any signs of tear or abnormal wear.

When replacing hydraulic hoses, ensure that you only use hoses of the characteristics and quality recommended by the machine's manufacturer. If in doubt, contact the AGRISEM INTERNATIONAL customer service network.

After each use of the machine, clean the hydraulic quick connectors' end fittings and fit the protective caps. Replace connectors which do not lock correctly or which leak.

Hydraulic hoses must never trail on the ground.

If a leak is detected, take all of the necessary precautions to avoid accidents. Never try to plug the leak with your hand or fingers.

Any pressurised liquid, in particular oil in the hydraulic circuit, can penetrate the skin and cause serious injury and infection.

In the event of injury, seek immediate medical attention.

To avoid accidents caused by unexpected hydraulic movements or by third parties, the distributors on the tractor must be locked or immobilised when they are not being used or in their transport position.

5.1.8. Instructions relating to the braking system

The braking system must be checked and serviced regularly. Servicing and repair work and adjustments must only be carried out by brake system specialists. Contact the AGRISEM INTERNATIONAL customer service network.

Stop the tractor immediately in the event of a brake system malfunction and have it repaired.

Before carrying out any work on the braking system, place the machine on stable ground and chock it.

For fitted machines, after carrying out any adjustment or repair operation on the braking system, perform a braking test in accordance with the appended procedure.

5.1.9. Instructions specific to AGRISEM INTERNATIONAL seeders

In addition to the instructions applicable to all of machines, users of AGRISEM INTERNATIONAL seeders must comply with the following instructions:

Never climb onto the machine elsewhere than on the AGRISEM INTERNATIONAL walkway provided for this purpose.

Only climb onto the machine when it is stationary.

When operations are performed on the AGRISEM INTERNATIONAL seeder or during flow tests, the seeder must be stationary and a 50-metre safety area must be enforced around it. The hydraulic system must be depressurised (e.g. turbine stopped) and the rear window of the tractor must be shut, the tractor switched off and the ignition keys removed.

Ensure that no one is on or near the seeder when the seed is being loaded. The AGRISEM INTERNATIONAL walkway must only be used when the seeder is stationary.

Always ensure that the entire area corresponding to the seeder's overall dimensions is completely clear.

Enforce the 50 m safety zone:

- when the turbine is started up to avoid any impact due to ejected objects (e.g. soil, oil, stones, metal, etc.).
- while using the machine

Users must comply with the highway regulations applicable in their country with regard to the front hopper.

If the tractor’s signalling equipment is not sufficient (or not sufficiently visible) ensure that you fit your front hopper with lighting and signalling plates.

5.1.10. Instructions relating to machines fitted with spring-assembly safety systems

Safety devices with pre-compressed spring assemblies are fitted on many AGRISEM INTERNATIONAL tools. These can be very dangerous when performing technical operations on the machine if all of the necessary precautions are not taken.

CAUTION

Written authorisation must be obtained from AGRISEM INTERNATIONAL before carrying out any operations on the "Spring Assembly".

5.1.11. Instructions relating to machines equipped with universal-joint transmission shafts

Consult the tractor manufacturer’s instructions when performing any operations on universal-joint transmission shafts.

5.1.12. Instructions relating to shipments and transport

Unless covered by a special transport contract, all shipments shall comply with the regulations applicable in the territories through which the assembly passes.

- For deliveries of less than three tonnes: the carrier is responsible for the loading, chocking, securing and unloading of the equipment from when he takes charge of it until its delivery.
- For deliveries of more than three tonnes: loading, chocking and securing on the one hand, and unloading on the other hand, are the responsibility of the contracting party or the recipient respectively. The responsibility for any equipment damage that occurs during these operations lies with the person carrying them out.

Unless there is a specific transport agreement, and for deliveries of more than 3 tonnes, the Purchaser will therefore unload the machine under his own responsibility.

Similarly, if the Purchaser sells the machine and has it delivered, as the sender, he will be responsible for the loading, chocking and securing of the equipment when it is sent.

In case of doubt regarding the unloading or loading, chocking and securing of the machine, please contact AGRISEM INTERNATIONAL.

The user shall acknowledge receipt of the machine and the official documents once handed-over by the dealer.

To do this, go to https://my.agrisem.com and follow the instruction given on the web site.

5.1.13. User's workstation

The machine must be operated by one person only, from the tractor driver's seat. Before each use, check the area around the machine, no-one must be within 50 metres of the machine. Check that there is sufficient visibility to ensure this condition of use.

5.2. Safety symbols on the machine

DANGER

You are the sole guarantor of safety. Correctly applying the safety instructions will not only serve to protect you but also those around you. Before using the machine, carefully study the instructions given in this manual as well as all the safety and instruction stickers affixed to the machine: consider them as an integral part of your safety programme. Also study all the usual work protection measures and above all, do not forget:

Safety depends on you. You can avoid accidents causing serious injury or death.

No.	Reference	Symbol	Meaning
1	ETIQ01-603		***WARNING: DANGER*** Read the instruction manual and safety instructions before starting up the machine and abide by them during operation.
2	ETIQ01-601		***WARNING: DANGER*** Stop the engine and remove the ignition key before carrying out servicing or repair operations.
3	ETIQ01-505		***WARNING: DANGER*** Stop the engine and remove the ignition key before carrying out servicing or repair operations.
4	ETIQ01-605		***RISK OF CRUSHING*** Keep away from the machine to avoid any risk of crushing.

No.	Reference	Symbol	Meaning
5	ETIQ01-641		***RISK OF INFECTION BY INJECTION IN THE BODY*** Follow the servicing and maintenance instructions in the user manual.
6	ETIQ01-609		***RISK OF CRUSHING*** Do not remain in the working area to avoid any risk of crushing.
7	ETIQ01-621		***RISK OF TIPPING*** To avoid any risk of tipping, do not unfold the equipment in steeply sloping areas.
8	ETIQ01-625		***RISK OF PINCHING*** Keep away from all moving parts to avoid any risk of pinching.
9	ETIQ01-633		***RISK OF CRUSHING / CUTS*** Keep away from the machine to avoid the risk of cuts or crushing.

No.	Reference	Symbol	Meaning
10	ETIQ01-627		***RISK OF CRUSHING*** Stay clear of swinging area of implements.
11	ETIQ01-639		***RISK OF EXPLOSION*** Pressure tank, do not service or repair.
12	ETIQ01-643		***RISK OF ELECTROCUTION*** Risk of electrocution, keep away from electric lines.
13	ETIQ01-651		***RISK OF FALLING*** Risk of falling, do not transport anyone on the machine.
14	ETIQ01-657		***RISK OF LOOSENING*** Risk of loosening, regularly check the tightness of the components in accordance with the maintenance plan.

No.	Reference	Symbol	Meaning
15	ETIQ01-637		***PROJECTION RISK*** Projection risk, stay away from the machine when working.
16	ETIQ01-607		***RISK OF CRUSHING BETWEEN THE TRACTOR AND THE MACHINE*** Always remain outside the working area of the three-point linkage when using remote control.
17	ETIQ01-623		***RISK OF CRUSHING***
18	ETIQ01-649		***RISK OF CRUSHING*** Never climb on the machine while the tractor engine is running.

IMPORTANT

These safety symbols must be present on the machine and legible. If any symbols are missing or damaged, contact AGRISEM INTERNATIONAL.

5.2.1. Series 3 fixed tractor-mounted

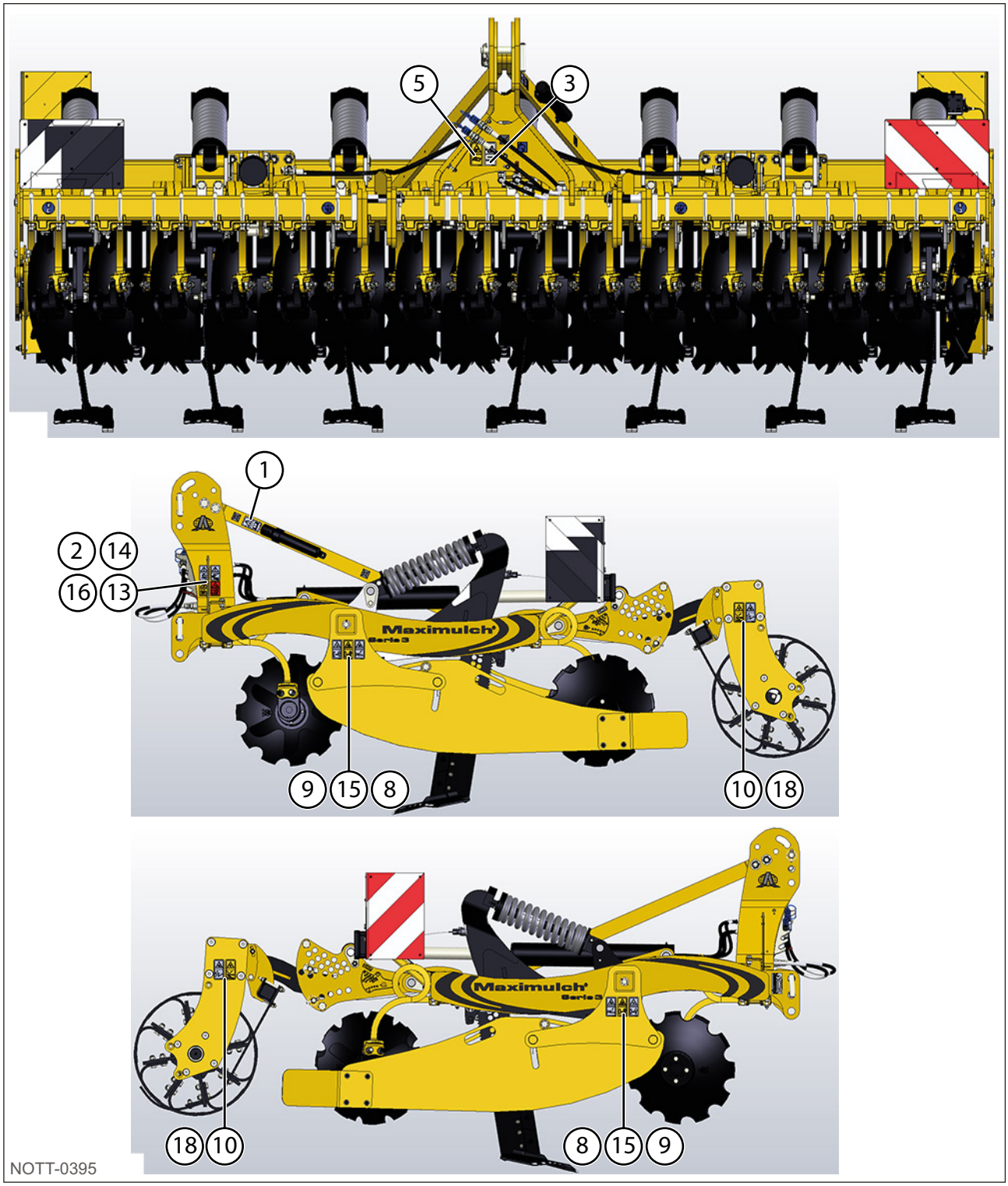

Fig. 19

5.2.2. Series 3 folding trailed

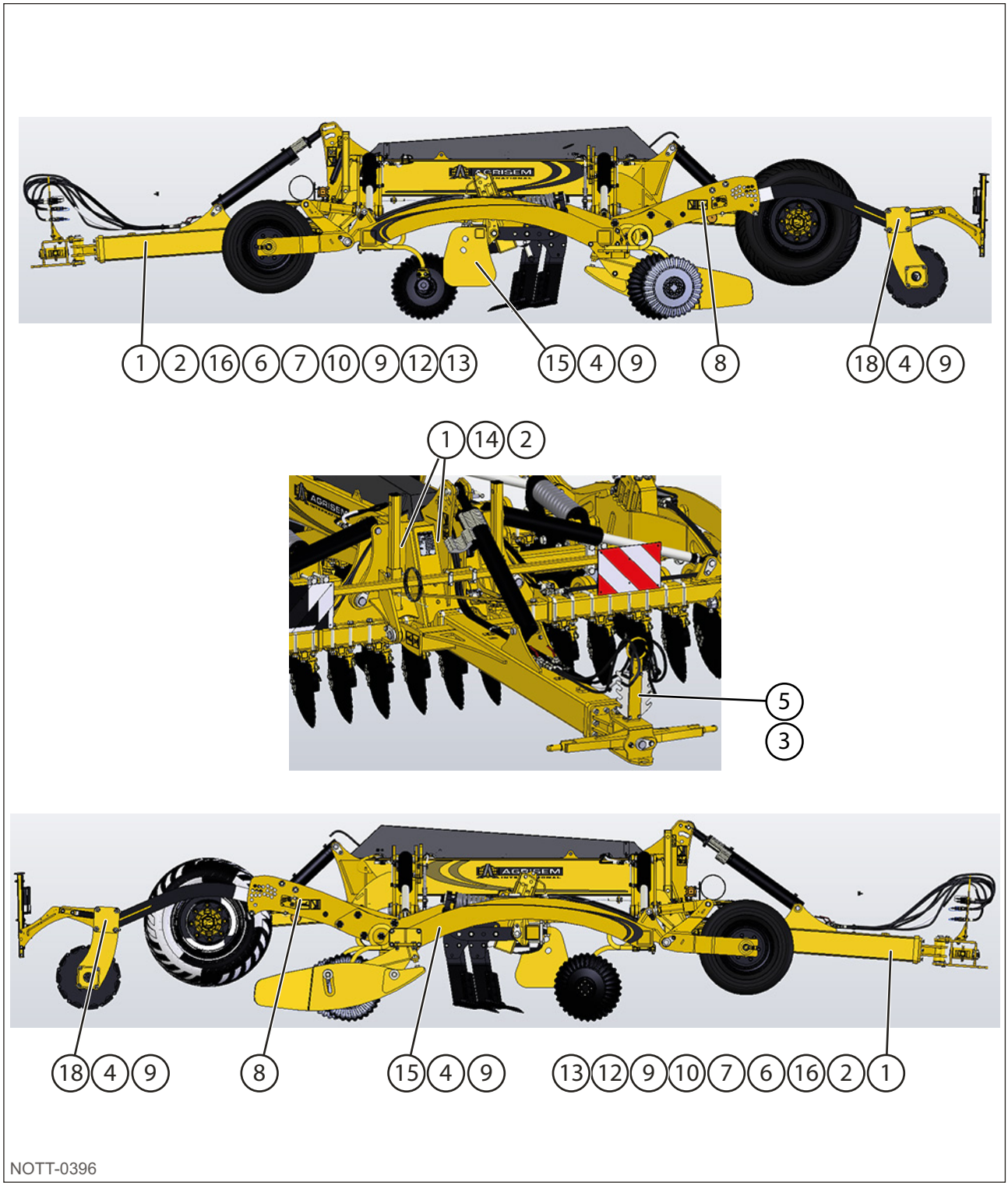

Fig. 20

5.2.3. Series 5

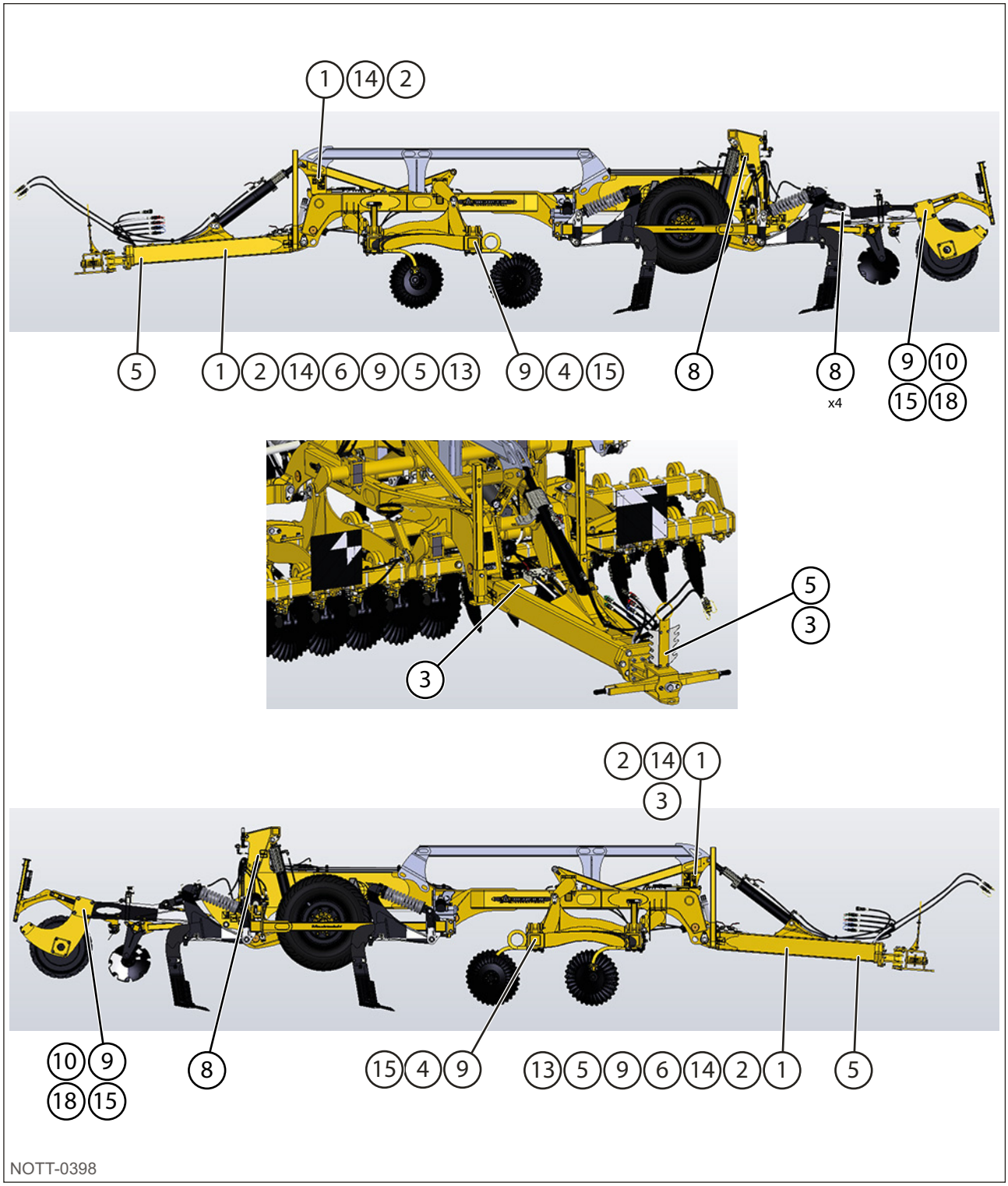

Fig. 21

5.2.4. Series 6

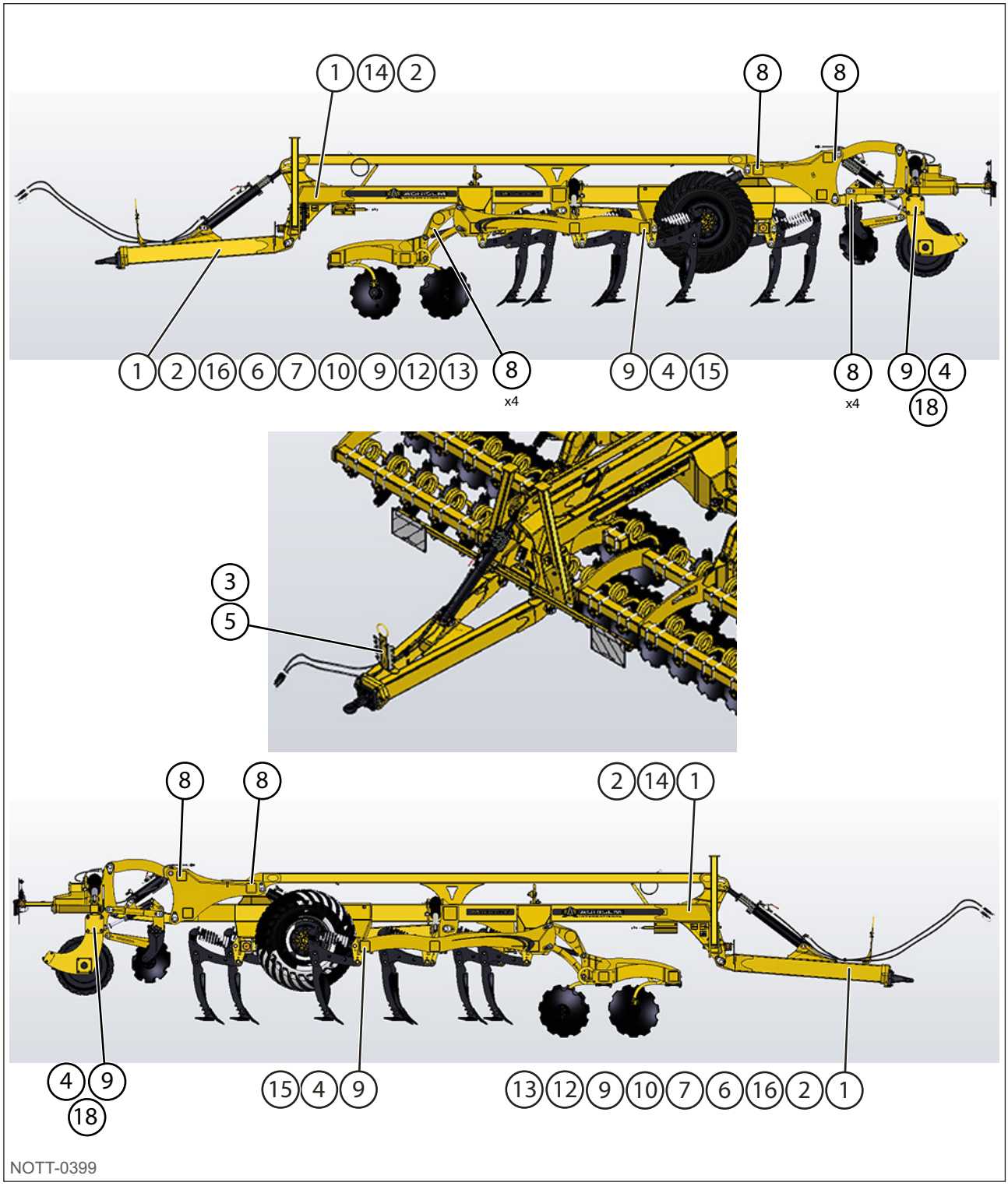

Fig. 22

6. Operation

6.1. Location and description of controls

6.1.1. Tractor-mounted machine coupling

No.	Description
1	Top link coupling pin
2	Lower link coupling pin
3	Fixed top link pin position
4	Floating top link pin position
5	Fixed bottom link pin position

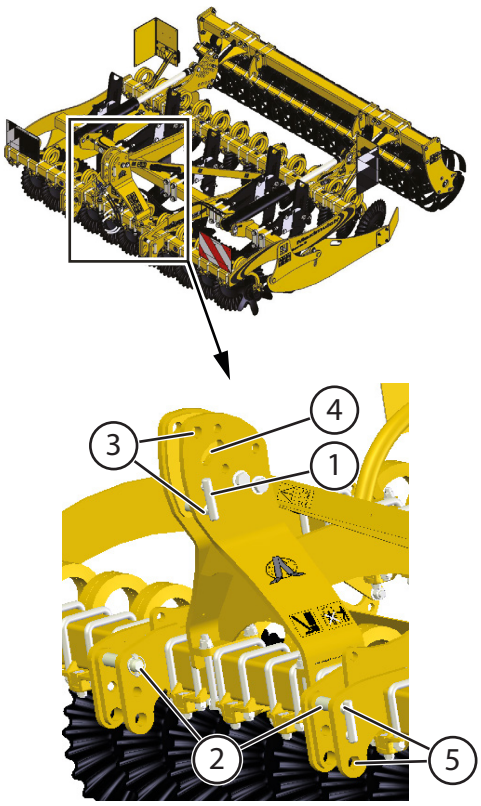

NOTT-0415

Fig. 23

6.1.2. Trailed machine coupling

No.	Description
1	Drawbar
2	Towing bracket
3	Drawbar coupling
4	Ball head drawbar coupling
5	Drawbar eye

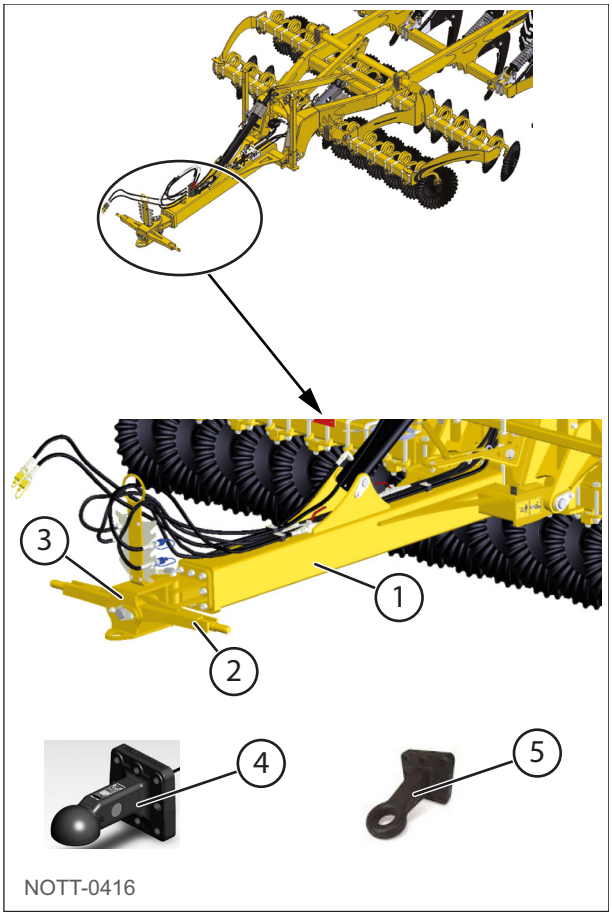

Fig. 24

6.1.3. Hydraulic connectors

WARNING

Any pressurised liquid, in particular oil in the hydraulic circuit, can penetrate the skin and cause serious injury and infection.

The functions controlled by each hydraulic line are indicated by colour-codes on the hydraulic hoses and the following pictograms. The pictograms are located on the drawbar coupling hose support bracket.

NOTE

The pictograms are common to the entire AGRISEM INTERNATIONAL machine range, certain functions may not be available on your machine.

NOTT-0250

Fig. 25

No.	Description	Hose colour-code
NOTT-0251	Raise / Lower hydraulic drawbar	Yellow
NOTT-0252	Pressure-free return of turbine	Red
NOTT-0253	Roller folding	Blue

No.	Description	Hose colour-code
NOTT-0254	Raise / Lower axle	Green
NOTT-0255	Turbine	Red
NOTT-0256	Raise / Lower markers	Black
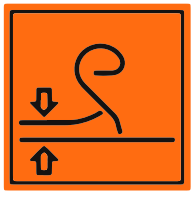 NOTT-0259	Strength adjustment of crossboards	Orange
NOTT-0258	Depth adjustment of blades or tines	Black
NOTT-0257	Fold / Unfold	Blue
NOTT-0260	Extend / Retract extensions	Black

No.	Description	Hose colour-code
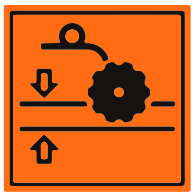 NOTT-0261	Depth adjustment of discs	Orange
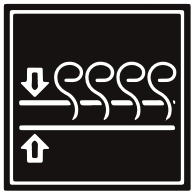 NOTT-0262	Depth adjustment of tines	Black
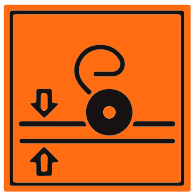 NOTT-0263	Depth adjustment of coulters	Orange
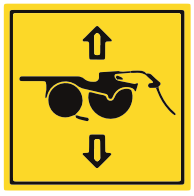 NOTT-0264	Raise / Lower seeding ramp	Yellow
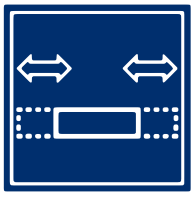 NOTT-0265	Extend / Retract extensions	Blue

6.1.4. Pneumatic connectors

No.	Description
1	Yellow hand
2	Red hand

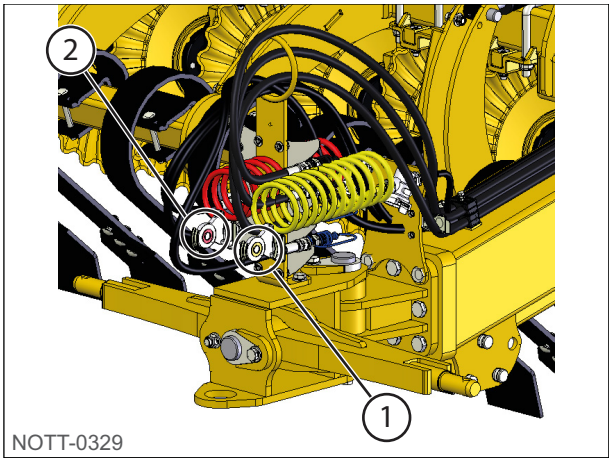

Fig. 26

6.1.5. Hydraulic control valves

According to the model, hydraulically-controlled elements are isolated and controlled by means of valves.

Model:

- Series 3 tractor-mounted

No.	Description
1	Folding roller

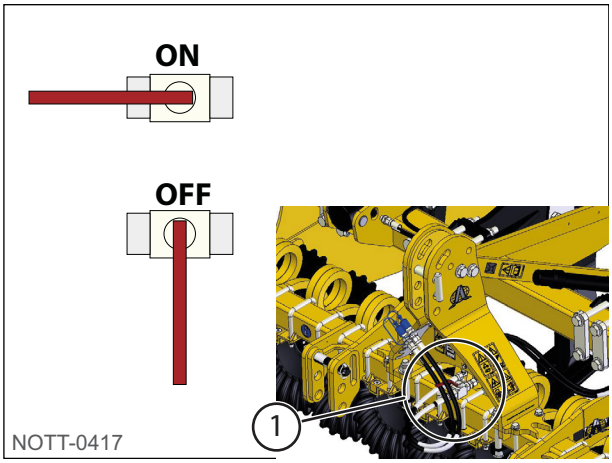

Fig. 27

Models:

- Series 3 folding trailed

No.	Description
1	Extension
2	Axle
3	Drawbar
4	Folding speed

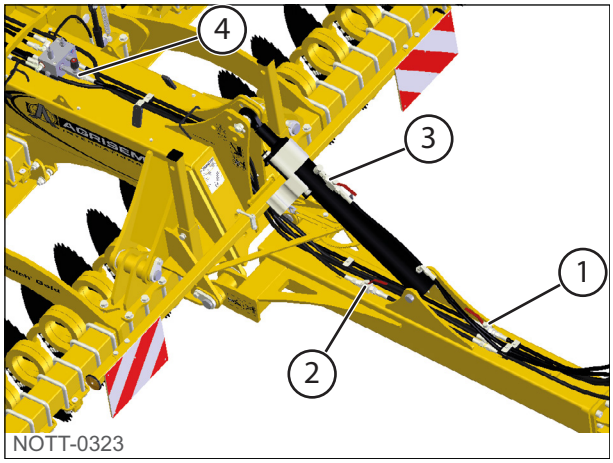

Fig. 28

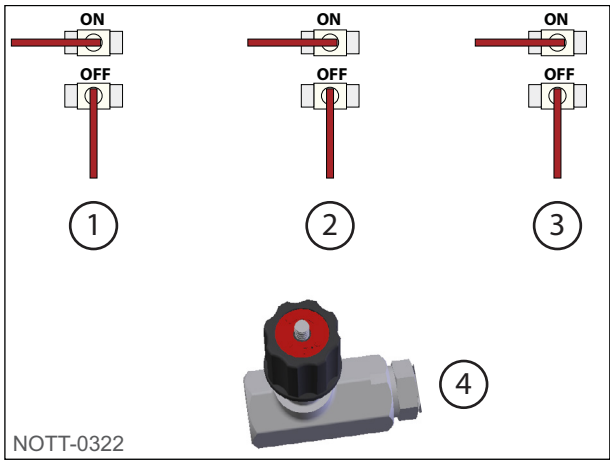

Fig. 29

Models:

- Series 5 trailed

No.	Description
1	Axle
2	Drawbar
3	Depth of discs
4	Depth of rollers
5	Roller speed

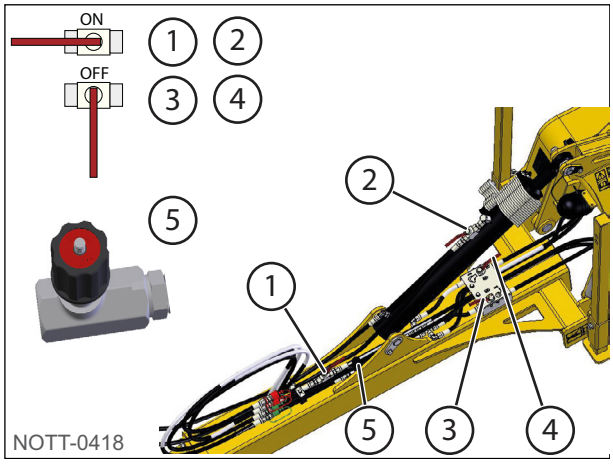

Fig. 30

Model:

- Series 6

No.	Description
1	Drawbar
2	Depth of rollers or depth of levelling discs

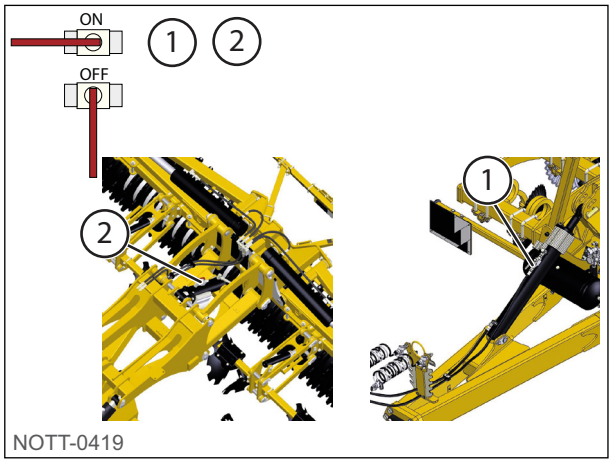

Fig. 31

6.1.6. Lighting system

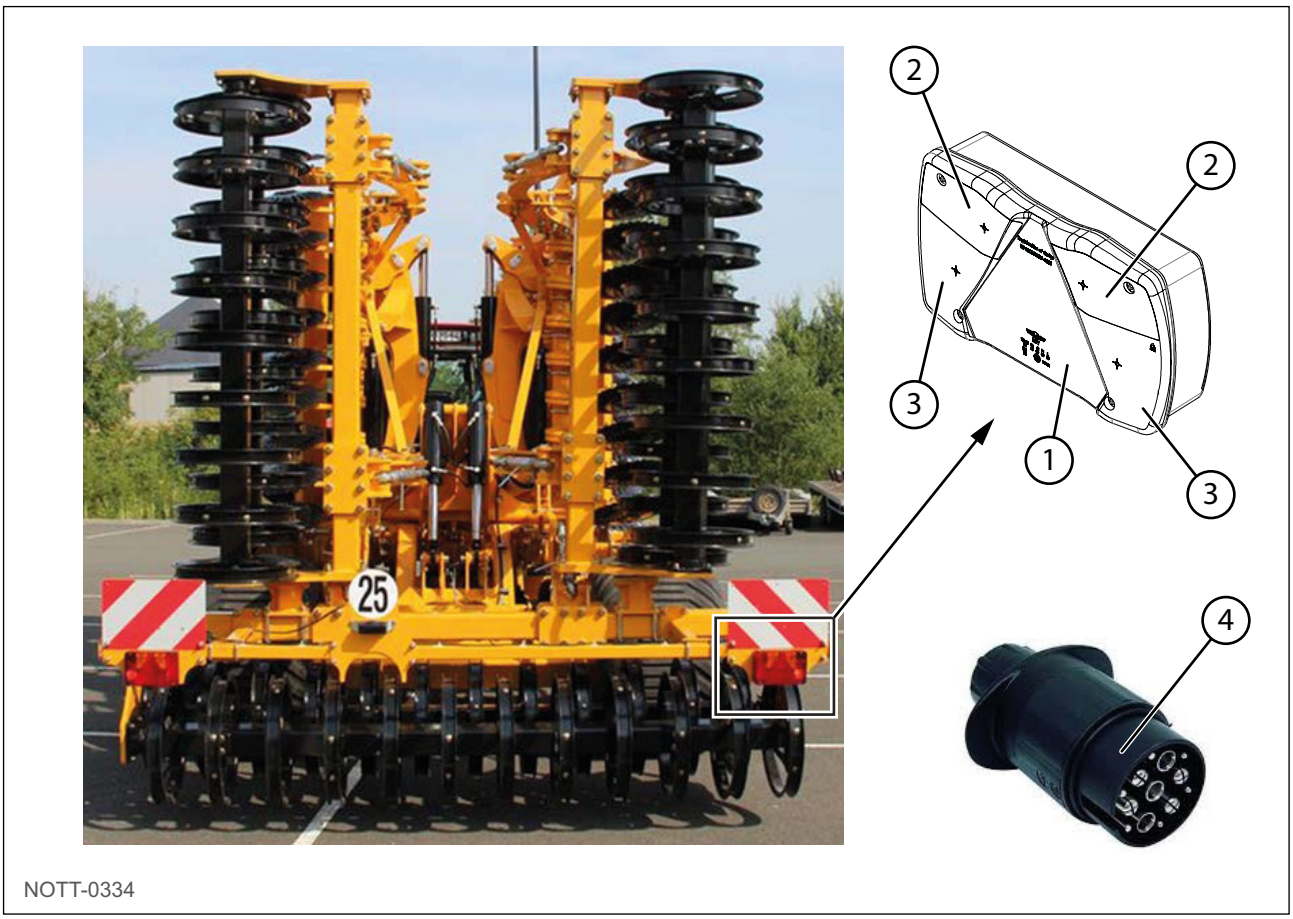

Fig. 32

No.	Description	Characteristics
1	Headlight	12 V 55 W
2	Indicator lamp	12 V 21 W
3	Brake light	12 V 21 W
4	Trailer socket	

NOTE

On certain models, the tool must be folded for the lights to be correctly positioned and in compliance with road traffic requirements.

6.2. Start-up

6.2.1. Foreword

NOTE

When accepting the machine, check that its has the required characteristics. Then carry out all of the preliminary operations prior to start-up as described in this manual.

6.2.2. Tractor/machine compatibility

NOTE

The information listed below is given for information only and is not in any way a substitute for an installation instruction manual, contact the after sales network.

CAUTION

Check the compatibility of the tractor and the machine.

- Front link arm of sufficient capacity
- Double-acting hydraulic control valve
- Single hydraulic line connected to the pressure-free return
- A 7-pin 12 V female connector for the tractor front lighting kit

6.3. Hitching/unhitching

CAUTION

Always carry out hitching and unhitching operations carefully and smoothly, without sudden movements.

CAUTION

Before carrying out hitching and unhitching operations, you must refer to the safety instructions.

CAUTION

No-one must be within 50 metres of the machine during the hitching or unhitching operation.

Before hitching or unhitching the machine, it is important to ensure that:

- The machine is on stable ground and there is no-one within a radius of 50 metres.
- The top-links of the tractor's three-point hitch are set to the same length.
- The tyres of the tractor are inflated to the same pressure.

- The tractor is suitable for the machine to which it is to be hitched and has been tested accordingly (see “Characteristics”, page 118).
- The tractor's hydraulic, mechanical and electrical connections are suitable for the machine to which it will be hitched.

6.3.1. Required tractor characteristics

CAUTION

Check that the tractor meets the necessary requirements before hitching the machine:

- Total authorised weight
- Permissible load capacities of the tyres
- The authorised axle loads of the tractor

NOTE

The authorised values for the total weight, the axle loads and the tyre load capacities can be found in the tractor's registration papers and user manual.

CAUTION

Take into account the clearance during transport, in particular to ensure that there is room to pass under bridges and low power lines (e.g.: Maximulch 6 m)

CAUTION

On tractor-mounted machines, the drawbar must be hitched to the top holes on the lower arms. This improves the stability of the machine when working.

6.3.2. Hitching a tractor-mounted machine

1 - Ensure that the machine is on stable ground.

2 - Bring the tractor up to the coupling on the machine.

3 - Align the lower link arms with the drawbar couplings.

4 - Hitch the lower link arms using the appropriate equipment.

5 - Adjust the length of the top link then secure with the pin and clip provided.

6 - Lock all handle-lock hitch pins with the clips.

7 - Connect the hydraulic hoses if the machine is fitted with them.

8 - Connect the plug for the lighting equipment and check its operation.

9 - Lift the machine.

10 - Fold the side extensions for transport.

11 - Lock the machine for transport if it folds using hydraulically controlled hooks or mechanical locks.

12 - Ensure that everything is correctly connected and locked and that no there are no foreign bodies on the machine.

6.3.3. Hitching a trailed machine

1 - Ensure that the machine is on stable ground.

2 - Bring the tractor up to the coupling on the machine.

3 - Hitch the machine to the coupling ring or the tractor's links depending on the type of drawbar fastening.

4 - Connect the hydraulic hoses (if the machine is fitted with them) according to the colour marking. If you are using a towing hook, connect the hydraulic hoses first to be able to adjust the height of the drawbar.

5 - Connect the plug for the lighting equipment and check its operation.

6 - Remove the parking stands (if the machine is fitted with them).

7 - Lift the machine with the drawbar and the trailed or semi-mounted kit.

8 - Fold the side extensions for transport (see “Transport”, page 91).

9 - Lock the machine for transport if it folds using hydraulically controlled hooks or mechanical locks.

10 - Ensure that everything is correctly connected and locked and that no there are no foreign bodies on the machine.

NOTE

Depending on the working conditions, the tractor's push bar can be positioned in the fixed hole (3) or the slotted hole (4).

It is recommended to use the slotted hole to better follow the ground contours.

When the slotted hole is used, always ensure that the hitch pin is centred in the hole.

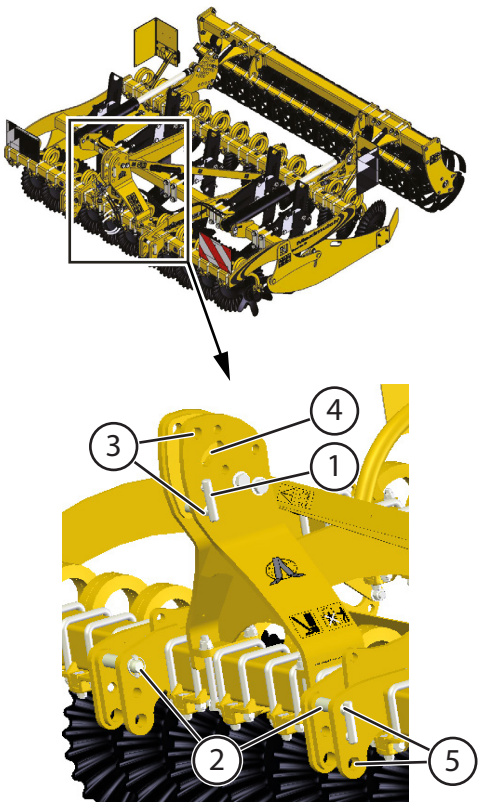

NOTT-0415

Fig. 33

6.3.4. Point of convergence

The point of convergence can be adjusted to improve the tractor's traction, stability and grip.

This also affects the tractor's lifting capacity.

On a tractor with 2 drive wheels, the point of convergence must be located close to the centre of the tractor.

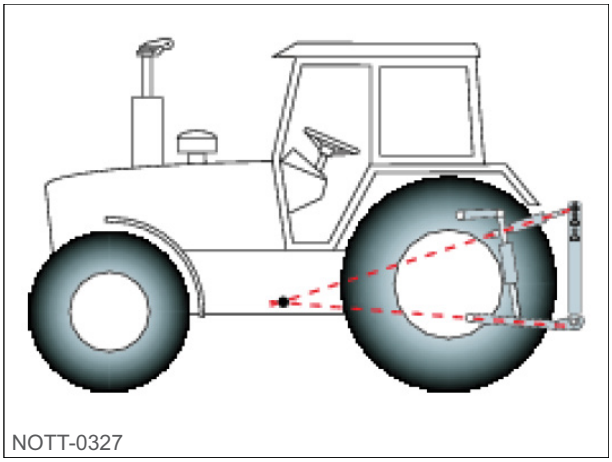

Fig. 34

On a tractor with 4 drive wheels, the point of convergence must be located towards the front drive axle.

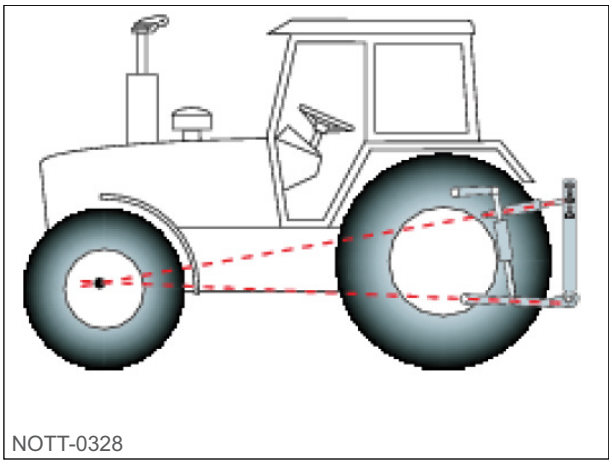

Fig. 35

6.3.5. Unhitching a tractor-mounted machine

CAUTION

For the *Maximulch Series 3 tractor-mounted model with the hydraulically folding roller option*, the roller must be in the WORKING position to prevent the tool swivelling towards the tractor due to the change in the machine's centre of gravity.

1 - Ensure that the machine is unhitched on stable ground.

2 - Unlock the machine before unfolding it.

3 - Unfold the machine if it folds.

4 - Disconnect the hydraulic hoses if the machine is fitted with them.

5 - Disconnect the plug for the lighting equipment.

6 - Unhitch the machine.

6.3.6. Unhitching a trailed machine

1 - Ensure that the machine is unhitched on stable ground.

2 - Unlock the machine before unfolding it.

3 - Unfold the machine if it folds.

4 - Put the parking stands in place (if the machine is fitted with them).

5 - Lower the machine with the drawbar and the trailed or semi-mounted kit.

6 - Disconnect the hydraulic hoses if the machine is fitted with them. If you are using a towing hook, disconnect any hydraulic hoses last in order to be able to adjust the height of the drawbar.

7 - Operate the mechanical handbrake system, if fitted.

8 - Disconnect the plug for the lighting equipment.

9 - Unhitch the machine.

6.4. Folding / unfolding

6.4.1. Folding / unfolding the roller

WARNING

Before carrying out hitching and unhitching operations, you MUST refer to the safety instructions.

WARNING

Before folding or unfolding check that there are no foreign bodies that could hinder movement.

WARNING

No-one must be within 50 metres of the machine while it is being folded or unfolded.

6.4.2. Folding the hydraulic roller

Operations must be performed in the order indicated below to avoid damaging certain components of the Maximulch.

1 - Initial position: roller unfolded

NOTT-0267

Fig. 36

2 - Fold the roller using the tractor's hydraulic control valve.

NOTT-0268

Fig. 37

3 - Close the valve located under the hose support bracket.

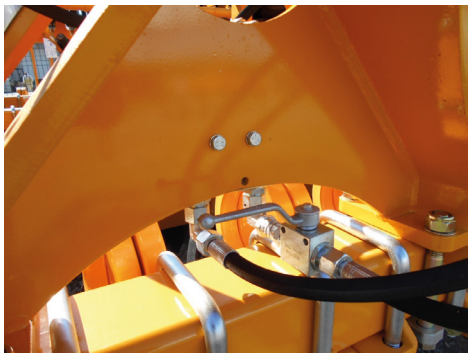

NOTT-0269

Fig. 38

4 - Fold the border spreading disc.

NOTT-0270

Fig. 39

5 - Final position: roller folded

NOTT-0271

Fig. 40

6.4.3. Unfolding the hydraulic roller

Operations must be performed in the order indicated below to avoid damaging certain components of the Maximulch.

1 - Initial position: roller folded

NOTT-0271

Fig. 41

2 - Unfold the border spreading disc.

NOTT-0270

Fig. 42

3 - Open the valve located under the hose support bracket.

NOTT-0272

Fig. 43

4 - Unfold the roller using the tractor's hydraulic control valve.

NOTT-0268

Fig. 44

5 - Final position: roller unfolded

NOTT-0267

Fig. 45

6.4.4. Folding the extensions

IMPORTANT

To fold the extensions, ensure that the hydraulic sensors in the work, position are activated otherwise the folding system will not work.

IMPORTANT

The hydraulic sensors can only be activated if the roller arm cylinders are fully extended.

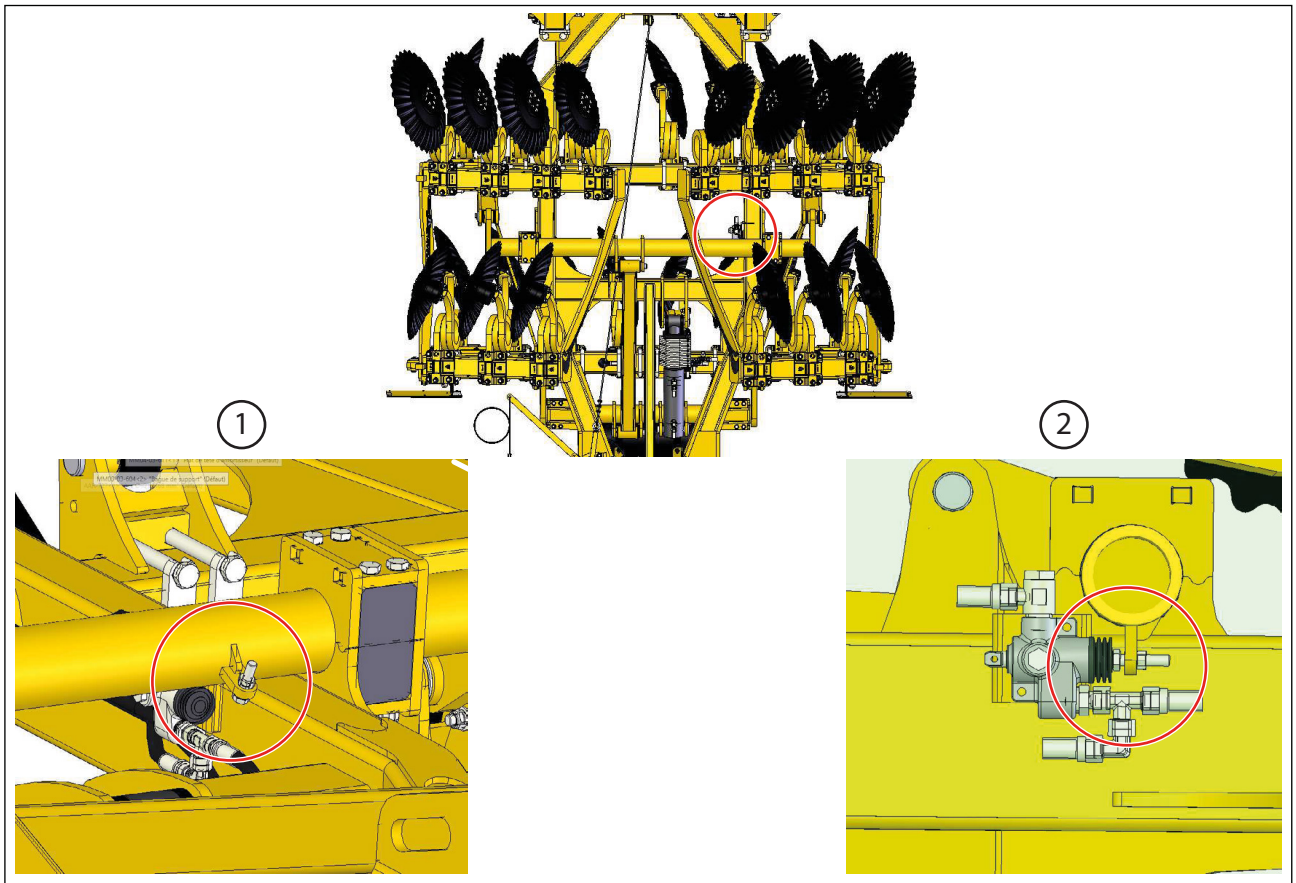

NOTT-0426

Fig. 46

No.	Description
1	Deactivated hydraulic sensor
2	Activated hydraulic sensor

Folding procedure

1 - Actuate the roller arm cylinders to their maximum extent. This allows the rollers to be retracted within the machine as much as possible in their transport position . The rollers must therefore remain within the regulatory width (width of less than 2.98 m during transport).

2 - Raise the discs to their maximum extent.

3 - Actuate the trailed kit drawbar cylinders to their maximum extent.

4 - Fold the extensions.

5 - The hydraulic locking kits will be activated together with the safety systems via the hydraulic sensors.

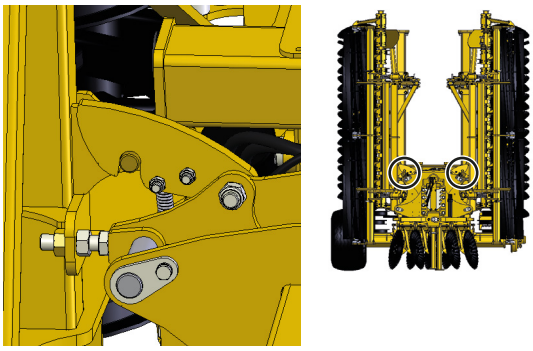

NOTT-0281

Fig. 47

On the mechanically locking version, manually install the locking bar.

IMPORTANT

If the safety system is not engaged, the tool cannot be unfolded.

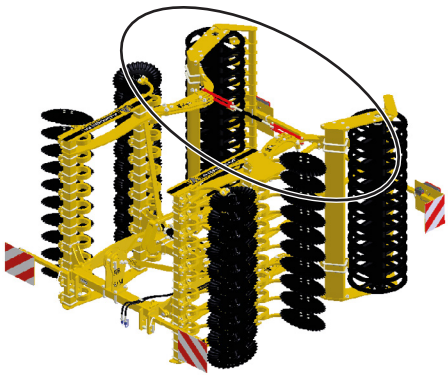

NOTT-0276

Fig. 48

6 - When the extensions are locked, activate the mechanical locking control valve (locking catch).

6.4.5. Unfolding the extensions

Operations must be performed in the order indicated below to avoid damaging certain components of the Maximulch.

1 - Initial position: machine folded

NOTT-0279

Fig. 49

2 - Place the roller arms in the desired working MULTISTOP position for two-part folding Maximulch versions (see “6.9.1. Roller adjustment”, page 70).

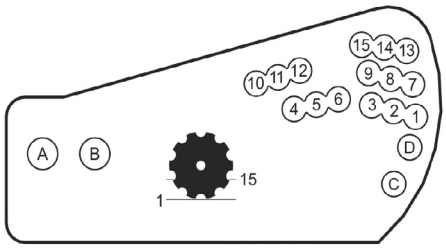

NOTT-0280

Fig. 50

3 - Operate the system in the folding position until the folding system unlocks.
- Hydraulic locking version: the system unlocks automatically when pressurised.
- Mechanical locking version: manually remove the locking bar.

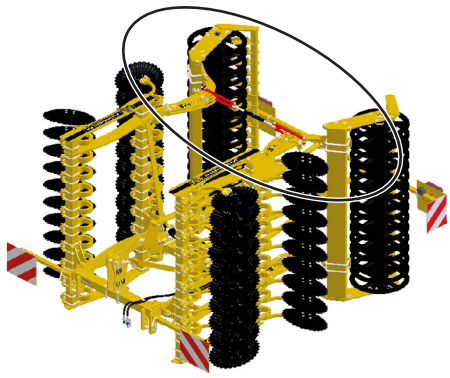

NOTT-0276

Fig. 51

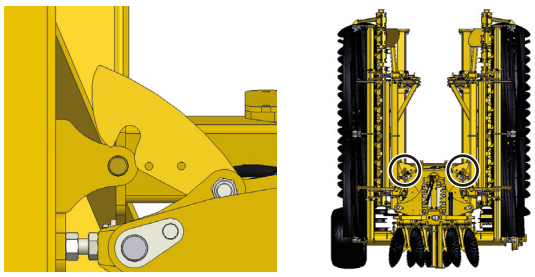

NOTT-0282

Fig. 52

4 - Open the isolating valves.

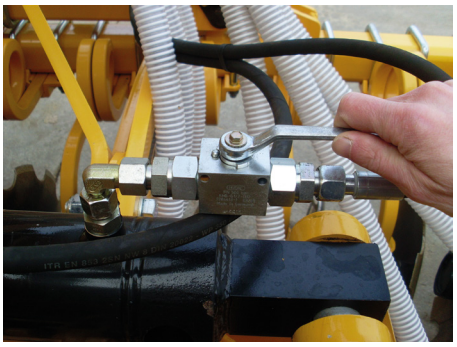

NOTT-0275

Fig. 53

5 - Actuate the tractor's folding hydraulic control valve up to the mechanical stop point.

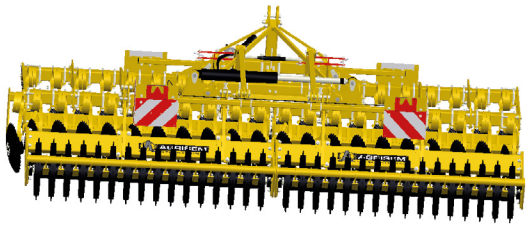

NOTT-0273

Fig. 54

6.4.6. Extension folding / unfolding end stop adjustment

CAUTION

The extensions of certain machines can be adjusted. Regularly check that the machine remains level when working.

Adjust the stop screws to give the unit an upwardly curving shape when hitched and raised.

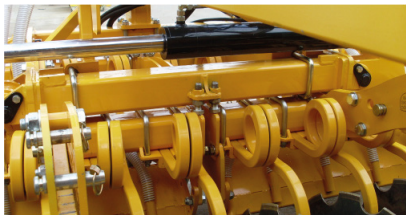

NOTT-0283

Fig. 55

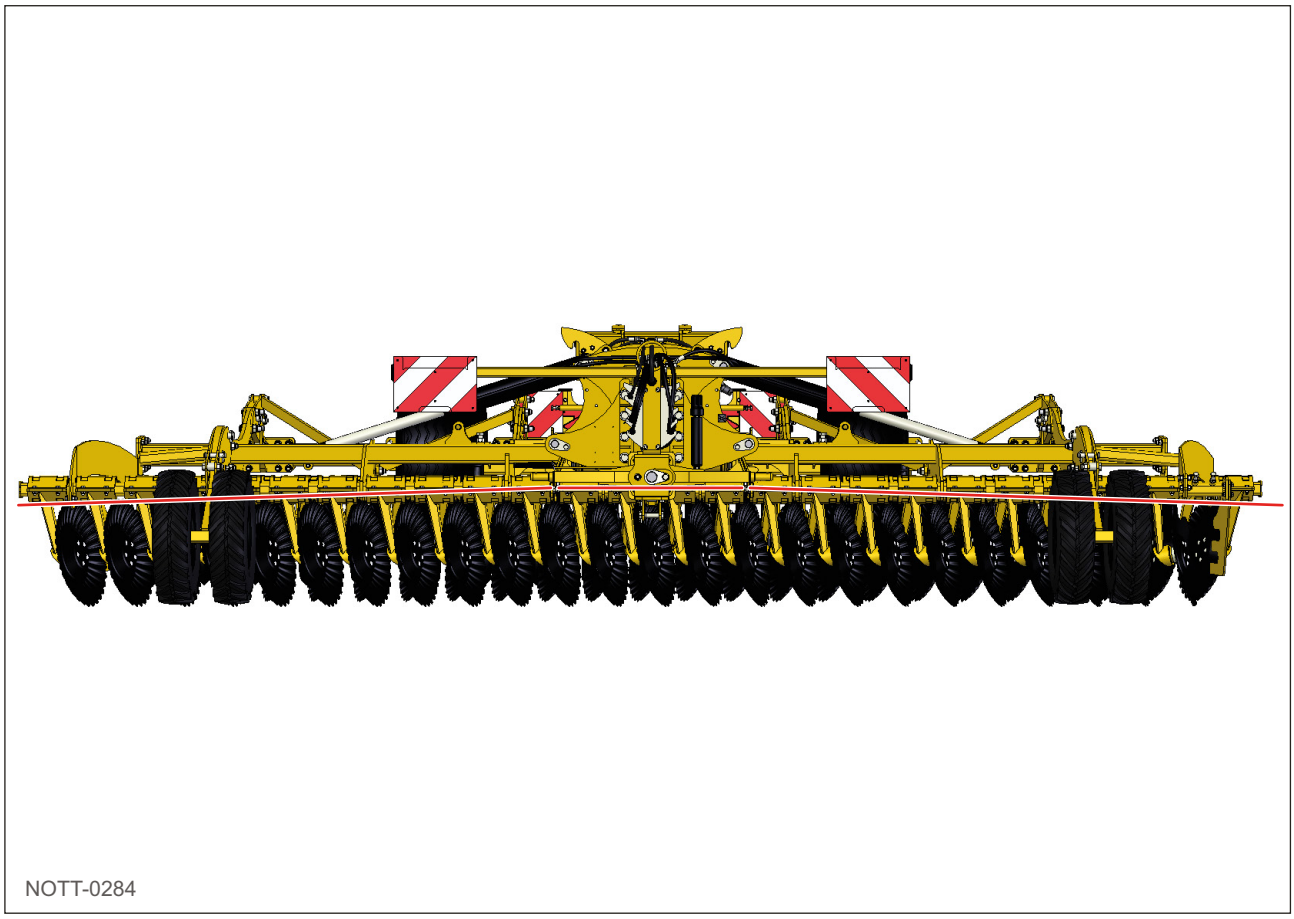

Fig. 56

6.5. When driving on the road

When driving on the road the machine must be converted to the transport position.

Raise the machine completely to prevent the working elements dragging on the ground. Road transport speed should not exceed 25 kph.

6.6. Dual-line air brake system

If the Maximulch is equipped with air brakes, the yellow (1) and red (2) lines must be connected to the tractor for optimum braking.

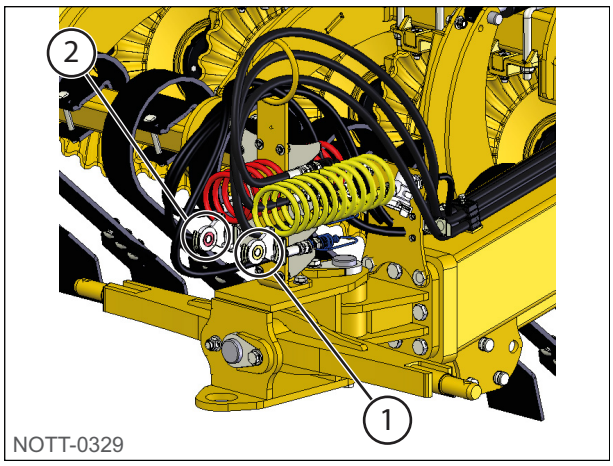

Fig. 57

CAUTION

It is forbidden to drive the Maximulch unless the brake couplings are connected to the tractor.

6.6.1. Coupling

1 - Reverse up to the machine and hitch the machine to the tractor.

2 - Connect the hoses: first the yellow line then the red line.

3 - The brake hoses are now attached and ready to operate.

6.6.2. Uncoupling

1 - Bring the machine to the parking position.

2 - Chock the wheels.

3 - With the machine still connected to the tractor, disconnect the red brake line then the yellow line.

4 - The brake is automatically actuated and the machine will not move.

NOTE

If the machine's tank is drained of air once all lines have been detached the brakes will come off (same situation as pushing the shunt valve).

5 - Put the hoses back in place.

6.7. Single-line air brake system

For machines equipped with a single-line hydraulic braking system, connect the brake hydraulic take-off to the tractor to ensure safe braking of the towed unit.

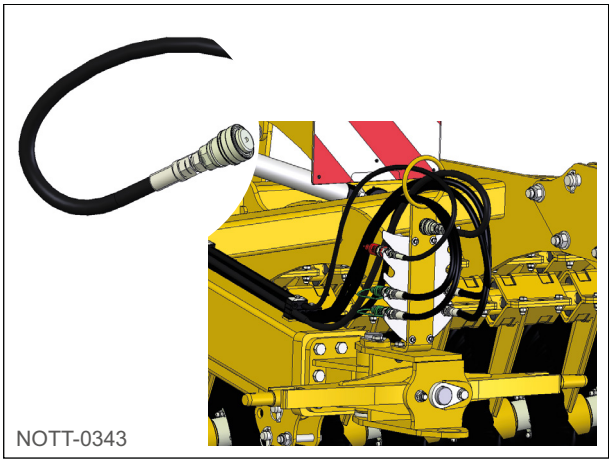

Fig. 58

6.8. Mechanical braking system

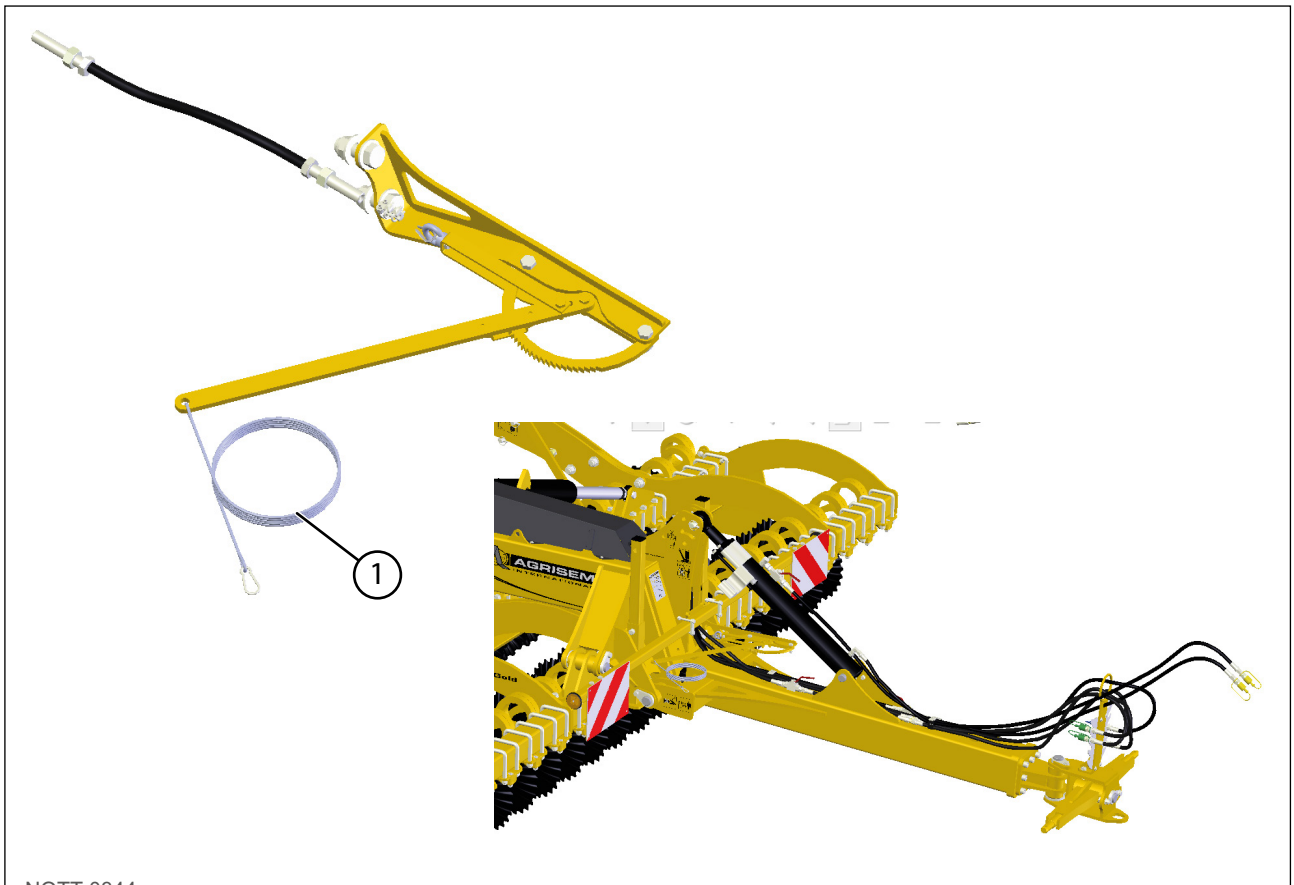

NOTT-0344

Fig. 59

For machines equipped with a mechanical braking system, connect the line (1) to the tractor to ensure secure braking of the towed unit in the event of a coupling failure.

Once the machine is immobilised, manually operate the handbrake.

6.9. Adjusting the working depth

6.9.1. Roller adjustment

The working depth of the discs is affected by the roller setting.

The roller also serves to level and compress the soil after it has been loosened by the discs.

The roller setting is adjusted by means of the AGRISEM INTERNATIONAL MULTISTOP system.

No.	Description
a	Upper stop setting
b	Lower stop setting
A	Min. spacing between rollers and discs
B	Max. spacing between rollers and discs
1 to 15	Working depth adjustment range from 1 to 15 cm

The lowest position - position (1) - corresponds to a minimum working depth.

The highest position - position (15) - corresponds to a maximum working depth.

Position (A) corresponds to the position of the roller relative to the Maximulch. This is the position in which the roller kit and the rear row of discs are the closest. This is the standard mounting of a roller kit on a Maximulch.

Position (B) corresponds to the position in which the roller is the furthest away for greater distance between the roller kit and the rear row of discs.

Positions (C) and (D) correspond to the bottom roller stop. This allows you to limit the travel of the roller arm between the lower and upper stops.

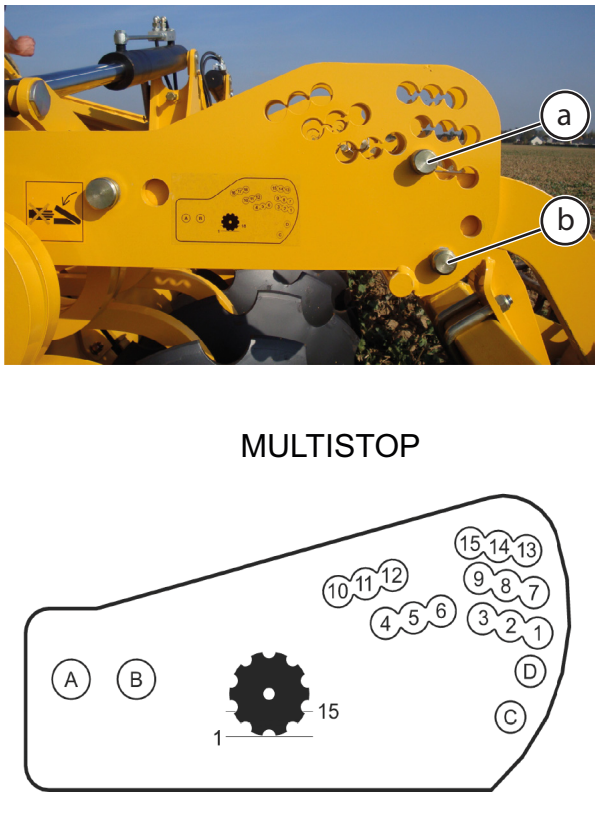

Fig. 60

NOTE

A Maximulch works at shallow depth (between 2 and 6 cm) thanks to a high travel speed (approx. 12 kph).

6.9.2. Depth adjustment of blades

The working depth of the blades can be adjusted manually or hydraulically without altering the working depth of the discs.

DANGER

Switch off the tractor engine and engage the parking brake before carrying out any work on the Maximulch.

WARNING

Check that the tool is correctly hitched and is perfectly horizontal during work, sideways and crossways.

WARNING

Check that the is no-one within the area of movement of the blade.

An identical setting must be used to each of the blades.

Mechanical adjustment of the depth of the bolt safety blades

No.	Description
1	Max. depth
2	Min. depth

There are 6 different positions between the minimum and maximum height.

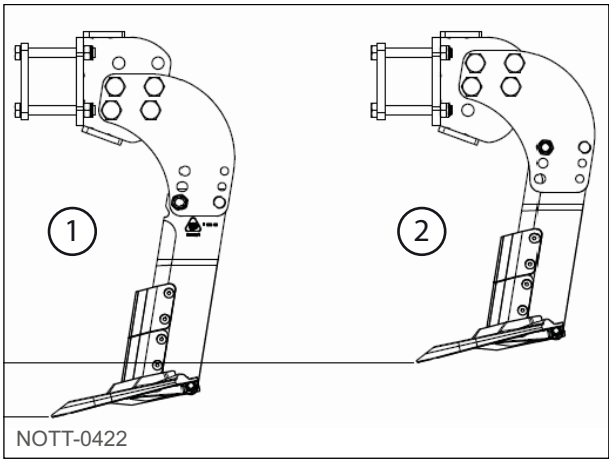

Fig. 61

NOTE

The MAXIMULCH can be used without the blades by simply removing the blades. To remove the blades, follow the procedure described above, lowering the blades as far as possible so that they come out of their rack and pinion housings.

CAUTION

At the end of the field, the MAXIMULCH must be lifted to avoid subjecting the tool to crossways movements before turning around.

The tractor should therefore be aligned with the direction of work before the MAXIMULCH is lowered.

Mechanical adjustment of the depth of the spring safety blades

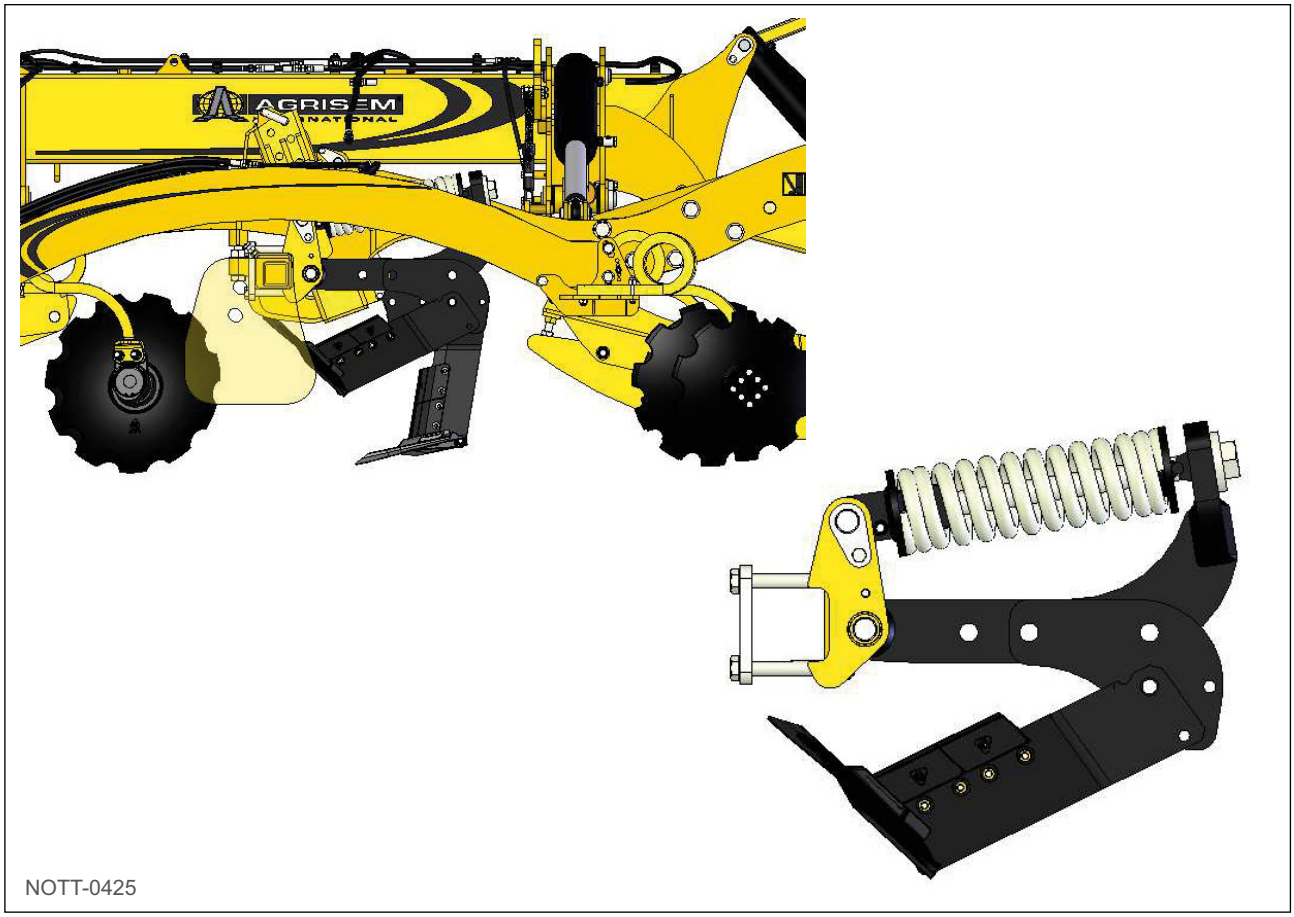

Fig. 62

IMPORTANT

Never remove the pin if the clip (1) is missing.

1 - Check that the beta clip (1) is present to prevent the blade falling when it is adjusted.

2 - Remove the pin (2).

3 - Using a wrench, slide the blade to the required height by means of the screw (3).

4 - Once the blade is in position, refit the pin (2) and its clip.

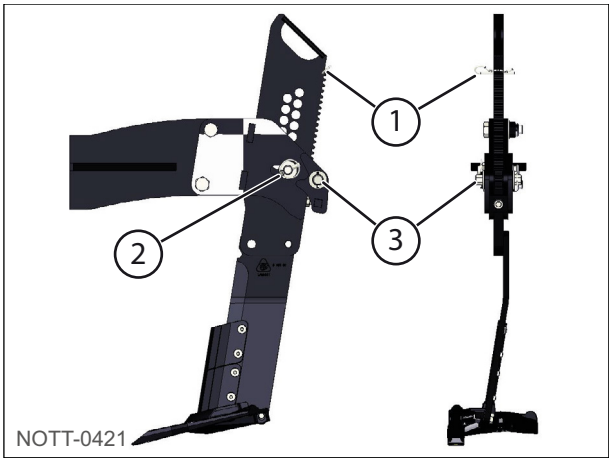

Fig. 63

NOTE

The MAXIMULCH can be used without the blades by simply removing the blades. To remove the blades, follow the procedure described above, lowering the blades as far as possible so that they come out of their rack and pinion housings.

CAUTION

At the end of the field, the MAXIMULCH must be lifted to avoid subjecting the tool to crossways movements before turning around.

The tractor should therefore be aligned with the direction of work before the MAXIMULCH is lowered.

Hydraulic adjustment of blade depth

1 - Release the pressure on the pins by raising the blades slightly using the tractor's control valve.

2 - Remove the adjustment pins.

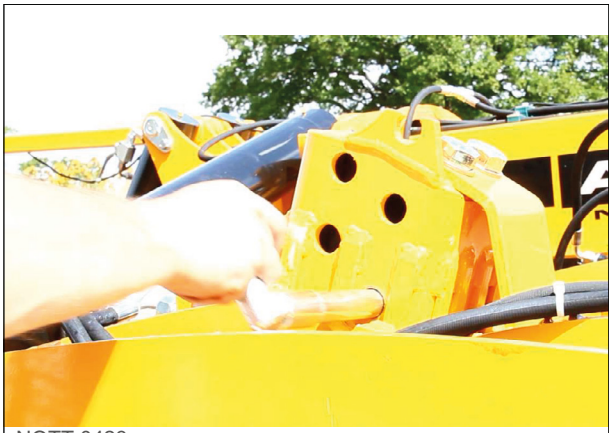

NOTT-0423

Fig. 64

3 - Using the double-acting control valve, adjust the blades to the required height.

4 - Refit the pins, rings and clips.

NOTT-0424

Fig. 65

6.9.3. Drawbar adjustment

The drawbar setting affects the working depth of the front discs.

Adjust the drawbar to obtain an identical working depth on the 2 rows of discs.

Adjust the drawbar setting so that it is tilted slightly towards the ground.

Fig. 66

In the ball hitch version (on the tractor's lift arms), the height of the linkage controls height of the first row of discs.

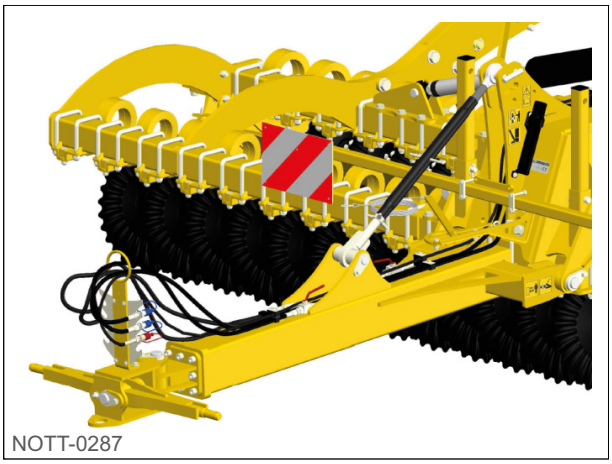

Fig. 67

Adjusting the mechanical drawbar

Tighten or loosen the mechanical drawbar to increase or reduce the working depth of the front row of discs.

Fig. 68

Adjusting the hydraulic drawbar

Add or remove shims to increase or reduce the working depth of the front row of discs.

To increase the number of shims, open valve (2) and actuate the corresponding auxiliary control valve to extend the drawbar cylinder. Insert the necessary shims, then retract the drawbar cylinder by means of the corresponding auxiliary control valve.

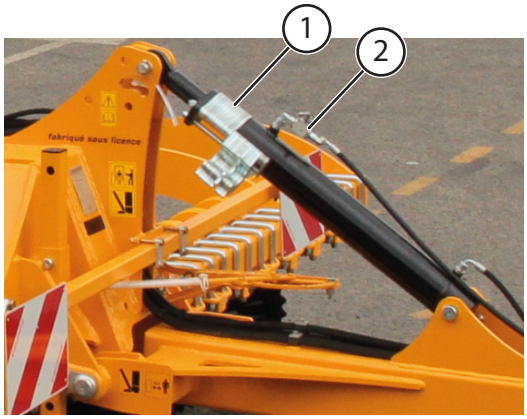

NOTT-0289

Fig. 69

6.9.4. Control wheels

The control wheels support the extensions to ensure the correct working depth when working. These wheels also support and lock the extensions during transport by road.

NOTT-0330

Fig. 70

6.10. Adjusting the left-hand side deflector

The left-hand side deflector may be adjusted to limit the spraying of soil from the first row of discs when working.

1 - Loosen the lock nuts and screws (1).

2 - Set the deflector to the required position.

3 - Retighten the screws (1) and the lock nuts.

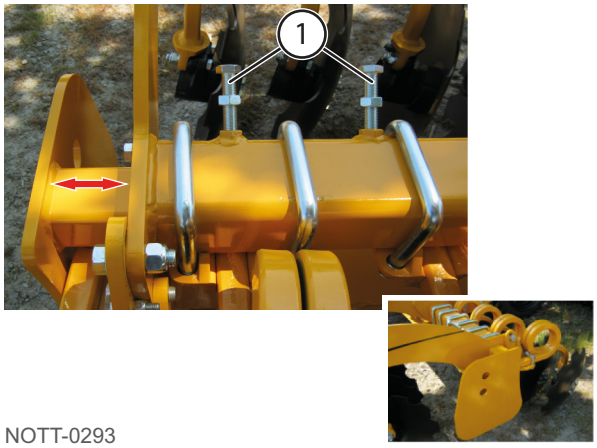

NOTT-0293

Fig. 71

6.11. Adjusting the right-hand side deflector

The right-hand side deflector is designed to limit the spraying of soil from the second row of discs.

The deflector must not be in contact with the ground during use.

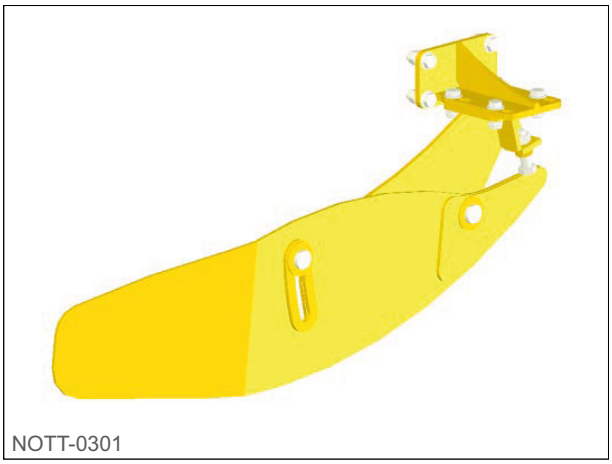
NOTT-0301

Fig. 72

Adjustment of clearance

Adjust the clearance between the last disc and the deflector.

NOTT-0294

Fig. 73

Vertical adjustment

This adjusts the clearance between the ground and the deflector by turning the stop screw (1).

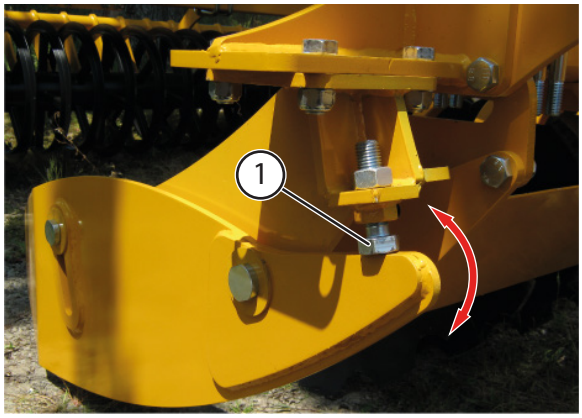

NOTT-0295

Fig. 74

6.12. Adjusting the clod-breaking board

For Maximulch Series 3 machines only

Some Maximulch models may be fitted with a clod-breaking board (1).

The clod-breaking board is located between the two rows of discs. It is designed to break clods.

The adjustment of the board may be fine-tuned according to the conditions of use.

1 - Remove the screws (2) at each end of the board.

2 - Set the deflector to the required position.

3 - Retighten the screws (2).

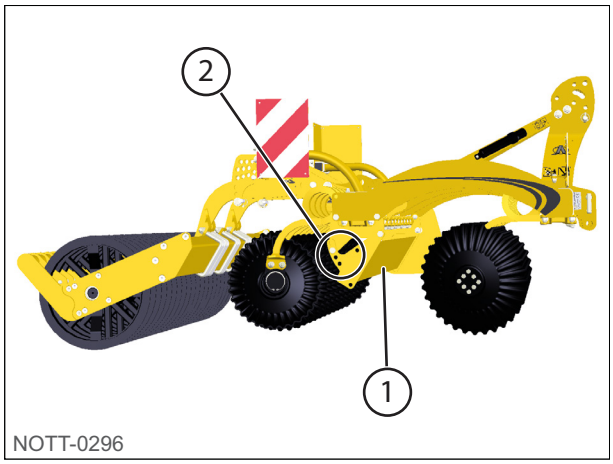

Fig. 75

6.13. Adjusting the border spreading disc

For Maximulch Series 3 machines only

The machine can be fitted with a border spreading disc to prevent a ridge forming when working.

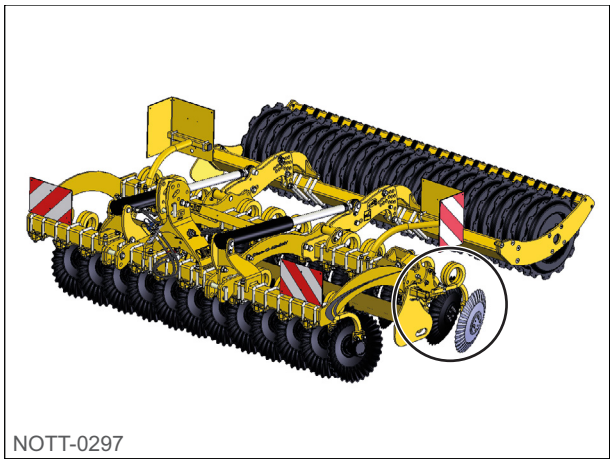

Fig. 76

The border spreading disc must be folded for transport.

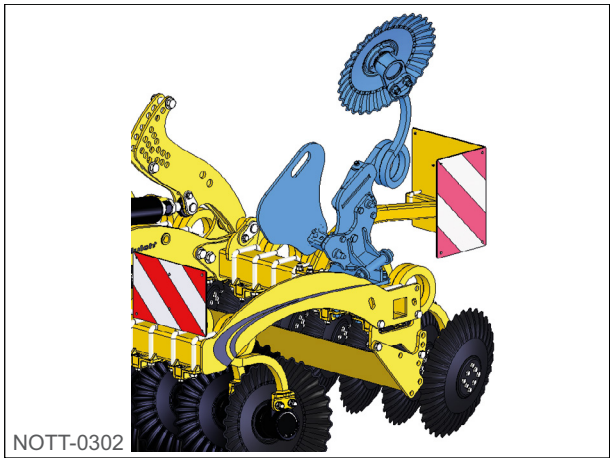

Fig. 77

The border spreading disc is adjusted by means of screws (1).

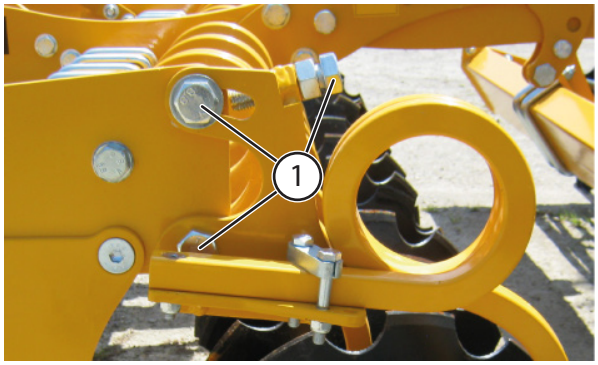

NOTT-0298

Fig. 78

The border spreading disc is adjusted by means of screws (1).

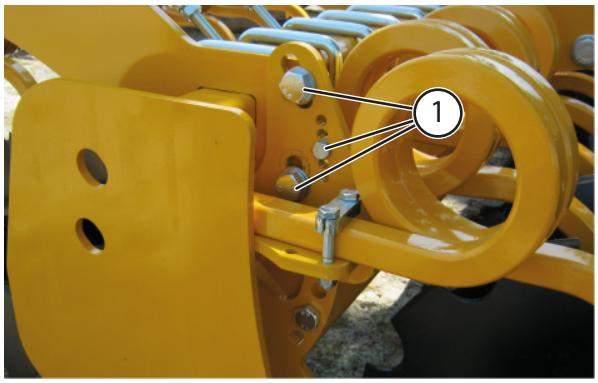

NOTT-0299

Fig. 79

When the machine is equipped with a folding roller, adjustments can be made to the following:

- deflector clearance,
- disc working intensity.

NOTT-0300

Fig. 80

6.14. Types of roller and applications

Roller	Description	Recommended use	Type of soil
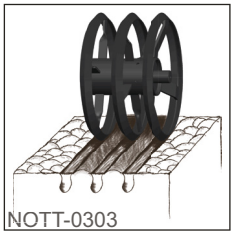 NOTT-0303	V-Sem	Deep vertical consolidation Good level of consolidation and crumbling	All types of soil
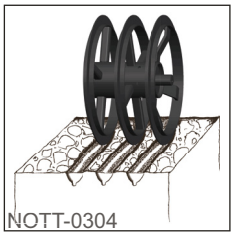 NOTT-0304	T-Sem	Deep vertical consolidation Good level of consolidation and crumbling	All types of soil
NOTT-0305	U-Sem	Deep vertical consolidation Good soil-seed contact	Sticky and wet soils
NOTT-0306	Cage roller	Shallow horizontal consolidation Versatile, lightweight, crumbling	All types of soil
NOTT-0307	Cage & Finisher roller	Shallow horizontal consolidation High level of consolidation and crumbling	Heavy, dry soils
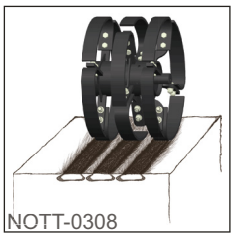 NOTT-0308	Flexi-Roll	Shallow horizontal consolidation Excellent level of crumbling	All types of soil
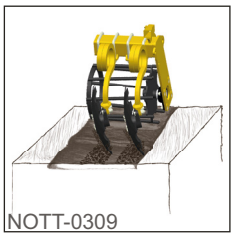 NOTT-0309	Combimulch + Combimulch Steel-Pack	Consolidation + light work Good level of consolidation and levelling	Weed germination through working the soil

Roller	Description	Recommended use	Type of soil
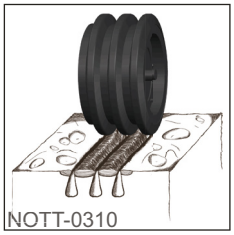 NOTT-0310	Agrix	High consolidation in difficult conditions Good soil-seed contact	Sticky and wet soils
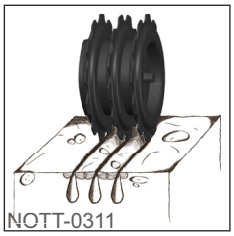 NOTT-0311	Steel-Pack	High consolidation in difficult conditions High consolidation over entire width Ideal levelling and crumbling	Sticky and wet soils
NOTT-0312	Flexi-Sem	Shallow consolidation in wet conditions Good soil-seed contact	Sticky and wet soils
NOTT-0313	Flexi-Pack	Shallow consolidation in wet conditions Even consolidation	Puddling, heavy and wet soils

6.15. Accessories

Accessories	Description	Information
NOTT-0314	Scraper	- 80 x 10 mm - Removable - Weight 3 m: 110 kg - Weight 4.5 m: 165 kg
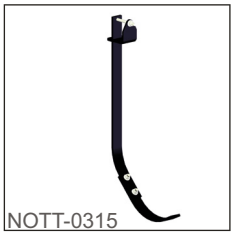 NOTT-0315	Levelling skis	- Not advised in stones - 45 x 10 mm - 3 positions - Removable wear piece - Weight 3 m: 150 kg - Weight 4.5 m: 230 kg

Accessories	Description	Information
NOTT-0316	Cleaner	- 45 x 6 mm - Reversible
NOTT-0317	Levelling harrow	- Ø 13 mm - Length: 510 mm

6.16. Soft ground adjustment recommendations

On soft ground, the pressure of the Maximulch on the tractor's top link can make the machine unstable. The machine's settings should therefore be changed.

1 - Disconnect the tractor's top link from the Maximulch.

2 - Accurately adjust the working depth of the 1st row of discs using the tractor's 3-point hitch position control.

3 - Validate the working depth at high speed without the top link.

4 - Once the working depth has been set, reconnect the tractor's top link to the Maximulch in the floating position. The hitch pin must be centred in the elongated hole.

If the machine remains unstable, lateral stabilising wheels must be fitted. These wheels will prevent the machine from rocking sideways as well as resonance phenomena.

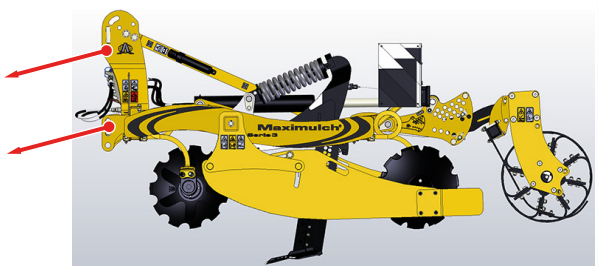

NOTT-0427

Fig. 81

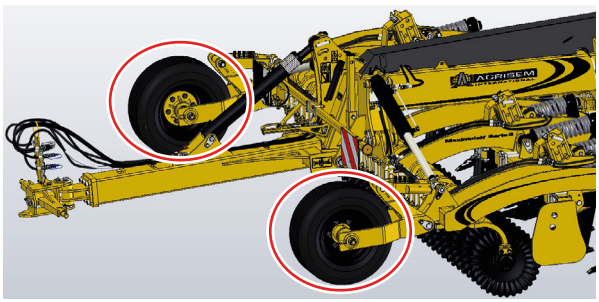

NOTT-0428

Fig. 82

NOTE

The stabilising wheels are not position control wheels. They must be set approximately 2 cm above the ground.

6.17. Firm ground adjustment recommendations

Under these conditions, it is recommended to use the tractor 3-point hitch in the floating position with no position control.

For the adjustment of the working depth of the 1st row of discs, see “6.9. Adjusting the working depth”, page 70.

For the adjustment of the working depth of the 2nd row of discs, see “6.9. Adjusting the working depth”, page 70.

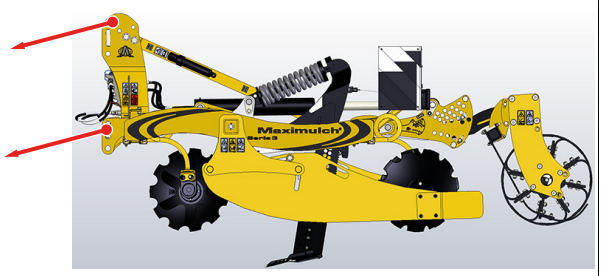

NOTT-0429

Fig. 83

CAUTION

The working depth apparent when the machine is at a standstill is often less than when the machine is in movement. With increasing speed, the machine's pressure on the top link and the percussion effect of the 3D securities increases the working depth. You should therefore check the working depth by examining the profile of the topsoil in an area worked at high speed and not at the edge of the field.

6.18. Immobilising the tractor/machine

6.18.1. Precautions

In order to avoid moisture damage, the machine should be parked, if possible, indoors or under cover. When manoeuvring the machine, pay attention to your surroundings. Ensure that nobody is in the manoeuvring area.

Park with the machine on level solid ground, if leaving parked for a long period of time it is advised the machine is left in the unfolded or work position.

6.18.2. Immobilisation in unfolded position

1 - Follow the steps to unfold the machine but stop at the point where all working elements are touching the ground.

2 - At this stage, the drawbar can be raised, relieving the load on the tractor hitch.

3 - Switch off the tractor and remove the hitch pin.

4 - Check that the tilt cylinders support the weight of the drawbar. Start-up the tractor and move it forward far enough to clear the hitch.

5 - Lower the drawbar onto the ground. Fit the wheel chocks.

6 - Turn off the tractor, depressurise all hydraulic lines and remove all hoses and cables from the rear of the tractor. Start-up the tractor and drive slowly forward.

6.18.3. Immobilisation in folded position

1 - Turn off the tractor. Swing the ¼ turn valve of the folding control hydraulic circuit from the transport position to the work position.

2 - Fit chocks under the wheels.

3 - Open the in-line hydraulic valve and operate the hydraulic take-off.

4 - Turn off the tractor and remove the pin from the drawbar.

5 - Start-up the tractor and move forward to clear the hitch.

6 - Retract the cylinder.

7 - Turn off the tractor and place all the hoses on the support bracket.

8 - Remove all the hoses and slowly move the tractor forward.

9 - After immobilisation, cover the machine with a tarpaulin to avoid cuts.

7. Winter Storage - Handling - Transport

7.1. Storage

If the machine is not going to be used for an extended period:

- Perform the machine cleaning maintenance operation
- Store the machine away from moisture and bad weather.
- Place the machine on flat, solid, stable ground.
- Disconnect electrical control devices and store them in a dry place.
- Protect the machine against rust. Only spray with oils that are easily biodegradable, e.g. rape oil.
- Unload the wheels using lifting and wedging equipment and accessories that are in compliance with and have been checked in accordance with the applicable regulations. Use standard, secure wedging systems to avoid any risk of accident linked to unstable blocking.
- Protect the hydraulic cylinder piston rods against corrosion.
- Carry out lubrication in accordance with the maintenance plan in the user manual.

IMPORTANT

The machine should, as far as possible, be stored indoors to avoid premature ageing. However, if stored out of doors, it should be folded out to prevent moisture damage.

CAUTION

Never work on a machine that is raised off the ground without having first secured it using suitable hoisting and propping devices.

CAUTION

Do not spray plastic and rubber parts with oil or an anti-corrosion agent. Otherwise these parts may become brittle and break.

7.2. Handling

CAUTION

Never stand in the handling area as this could result in serious or fatal injury.

CAUTION

The lifting points must be used simultaneously for the safety of handling.

CAUTION

During handling, some components may have sharp edges. Wear suitable personal protective equipment (safety gloves, goggles, safety shoes) when handling the components.

The machines are equipped with attachment points for lifting operations. Pictograms enable them to be more quickly identified.

Handling must be carried out using appropriate lifting and wedging equipment and accessories for the load to be moved, that are compliant and have been checked in accordance with the applicable regulations.

To know the approximate weight of the assembly, see Characteristics.

NOTT-0381

Fig. 84

7.2.1. Maximulch series 3

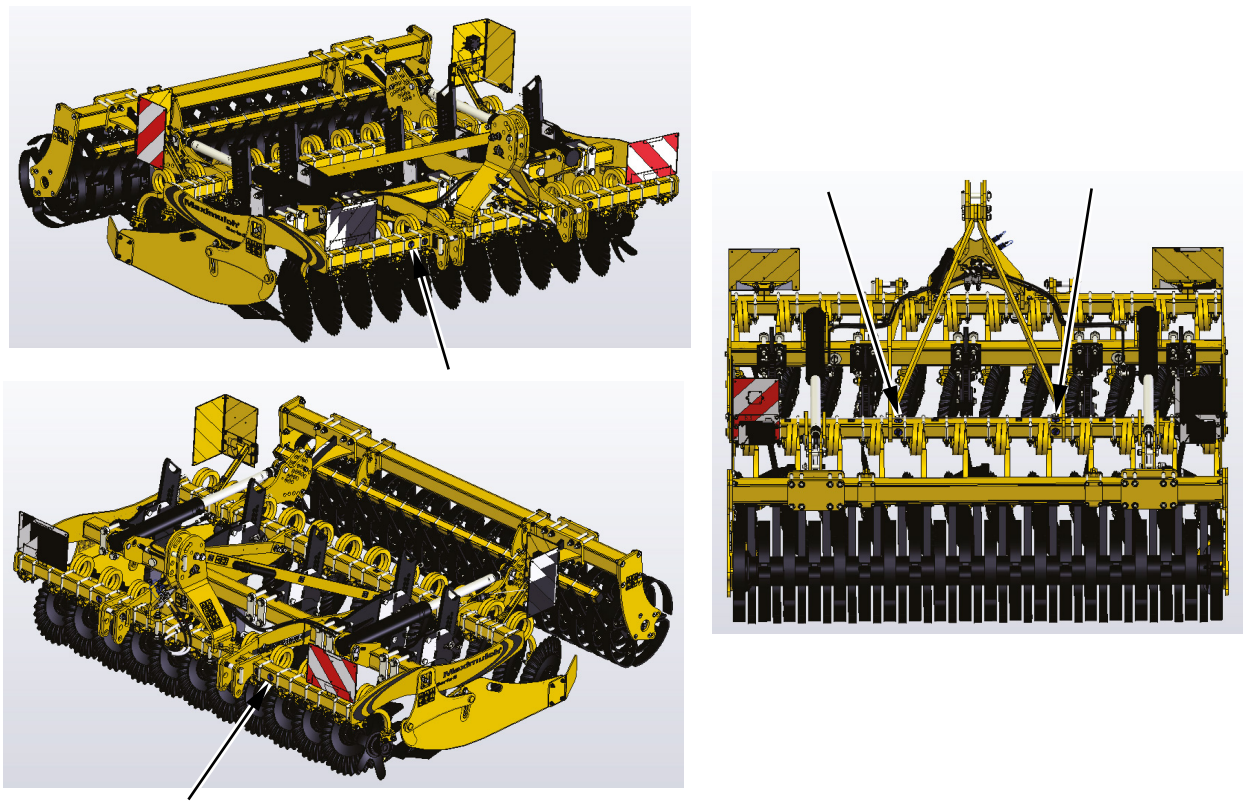

NOTT-0400

Fig. 85

7.2.2. Maximulch series 3 trailed

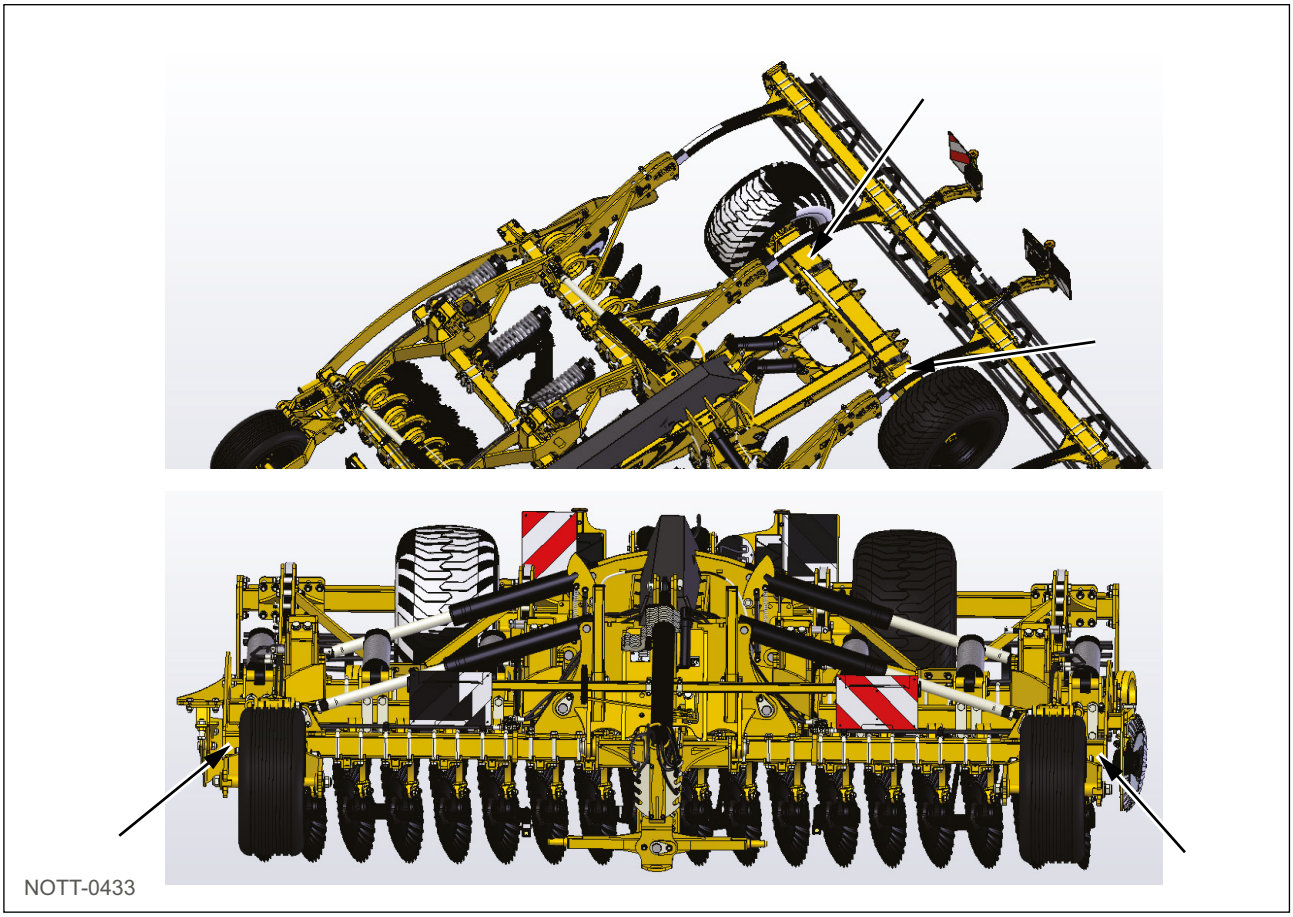

Fig. 86

7.2.3. Maximulch series 5

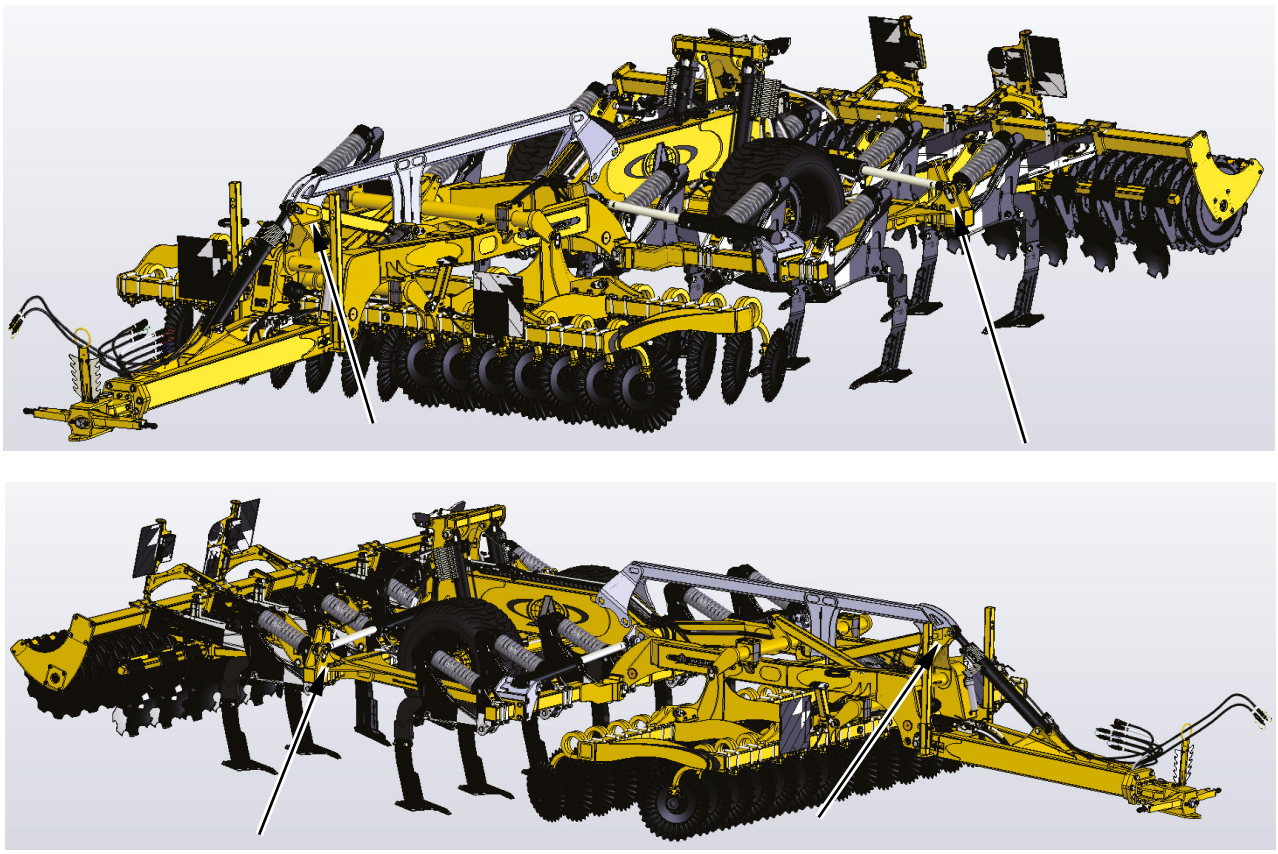

NOTT-0401

Fig. 87

7.2.4. Maximulch series 6

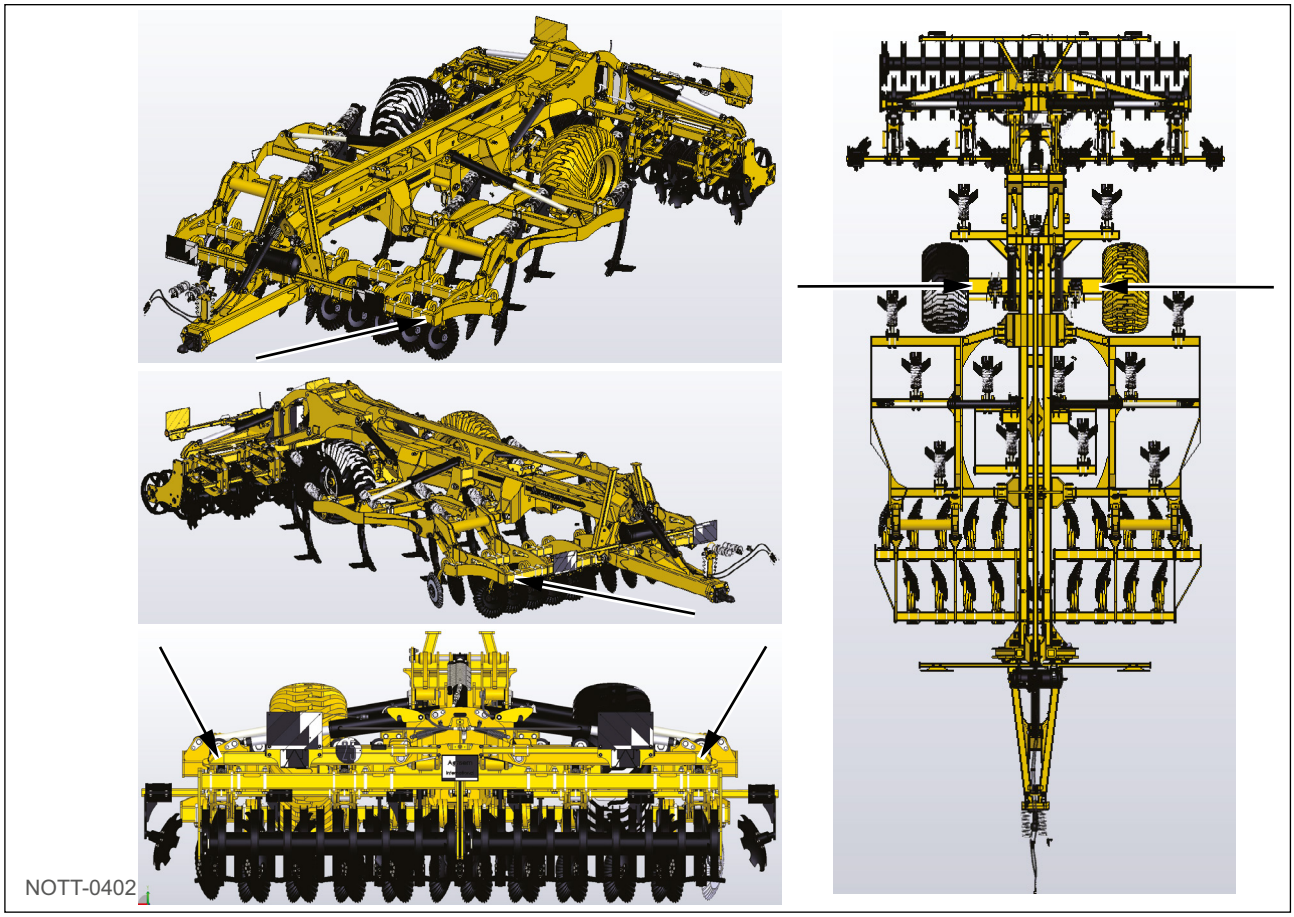

Fig. 88

7.3. Transport

CAUTION

Firmly secure the machine on the flat-bed using straps that are compliant and have been checked in accordance with the applicable regulations.

Ensure that there are no unsecured items on the flat-bed which might be thrown against the machine during transport.

The machines are equipped with attachment points for lifting operations. Pictograms enable them to be more quickly identified.

Handling must be carried out using appropriate lifting and wedging equipment and accessories for the load to be moved, that are compliant and have been checked in accordance with the applicable regulations.

To know the approximate weight of the assembly, see Characteristics.

NOTT-0412

Fig. 89

During transport, the machine must be secured as described below.

7.3.1. Maximulch series 3 mounted

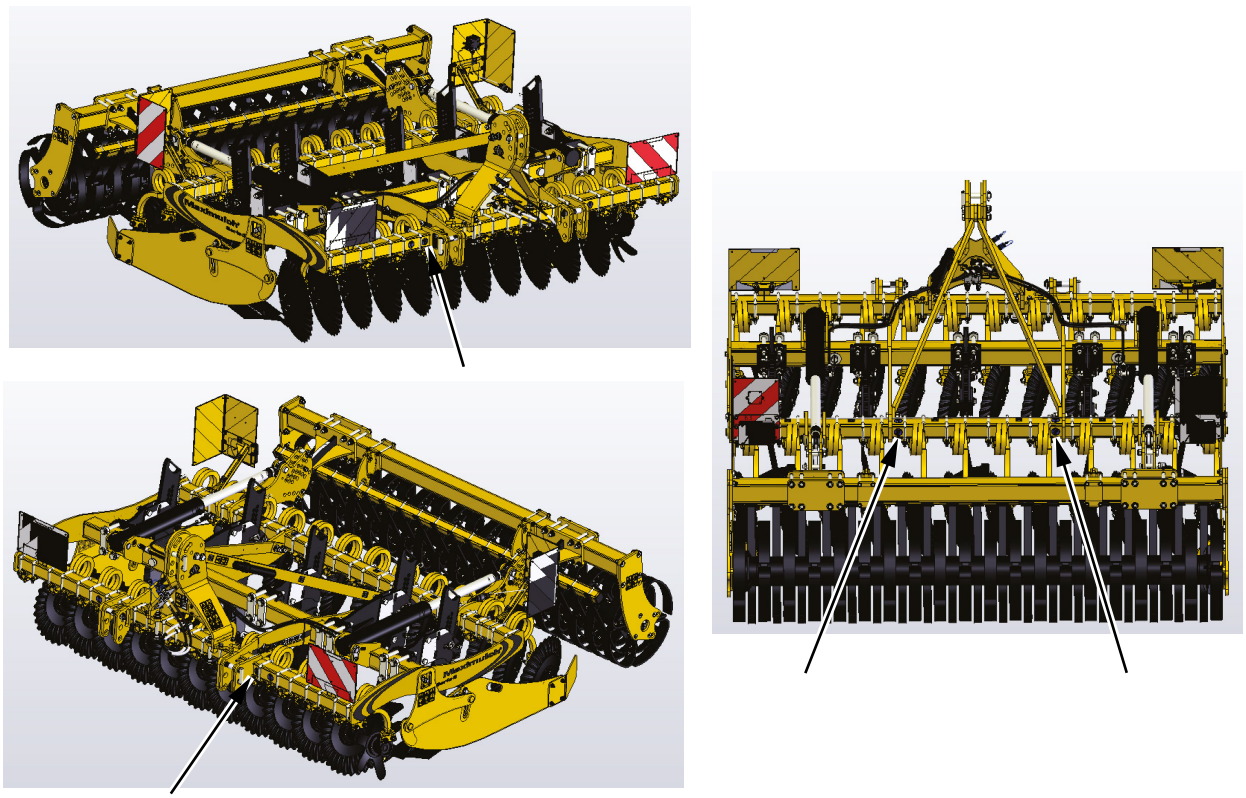

NOTT-0430

Fig. 90

7.3.2. Maximulch series 3 trailed

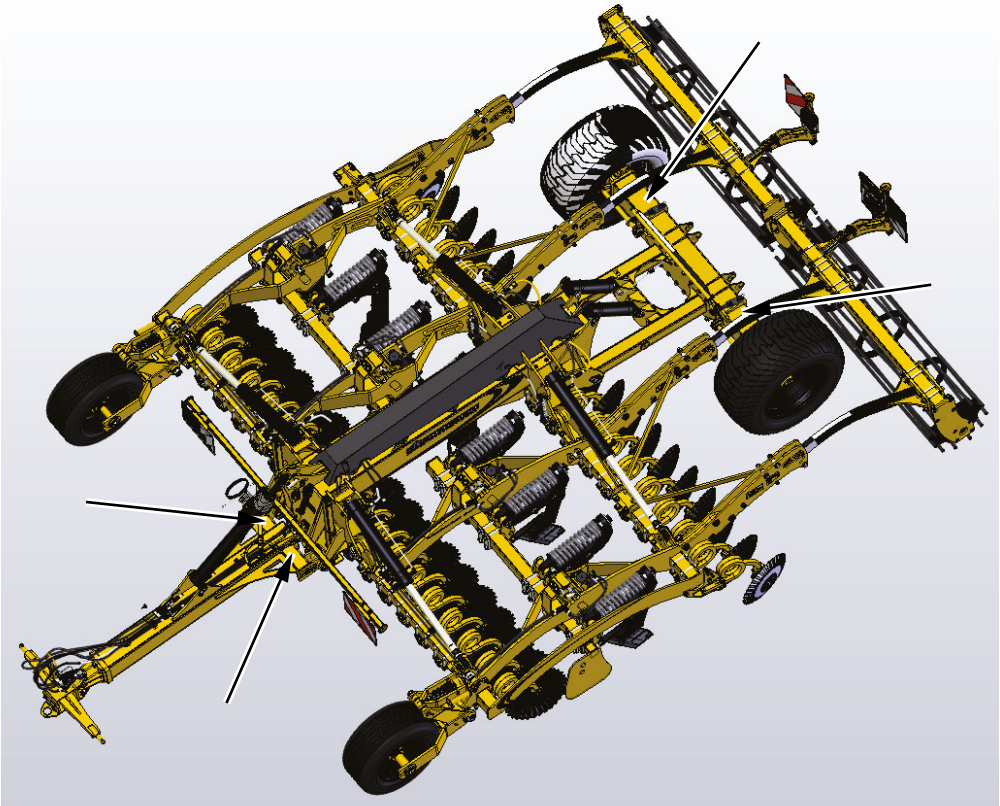

NOTT-0432

Fig. 91

7.3.3. Maximulch series 5

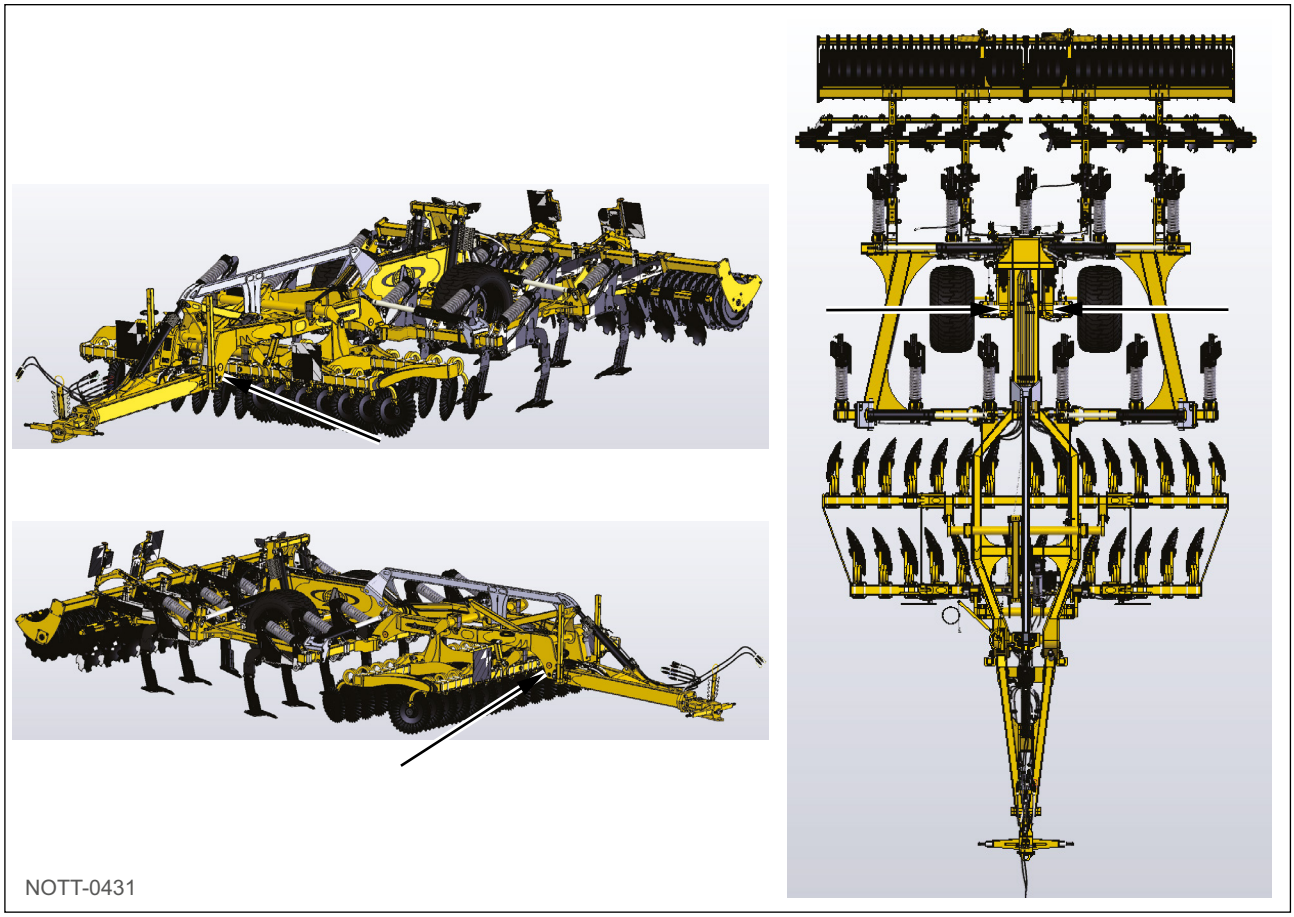

Fig. 92

7.3.4. Maximulch series 6

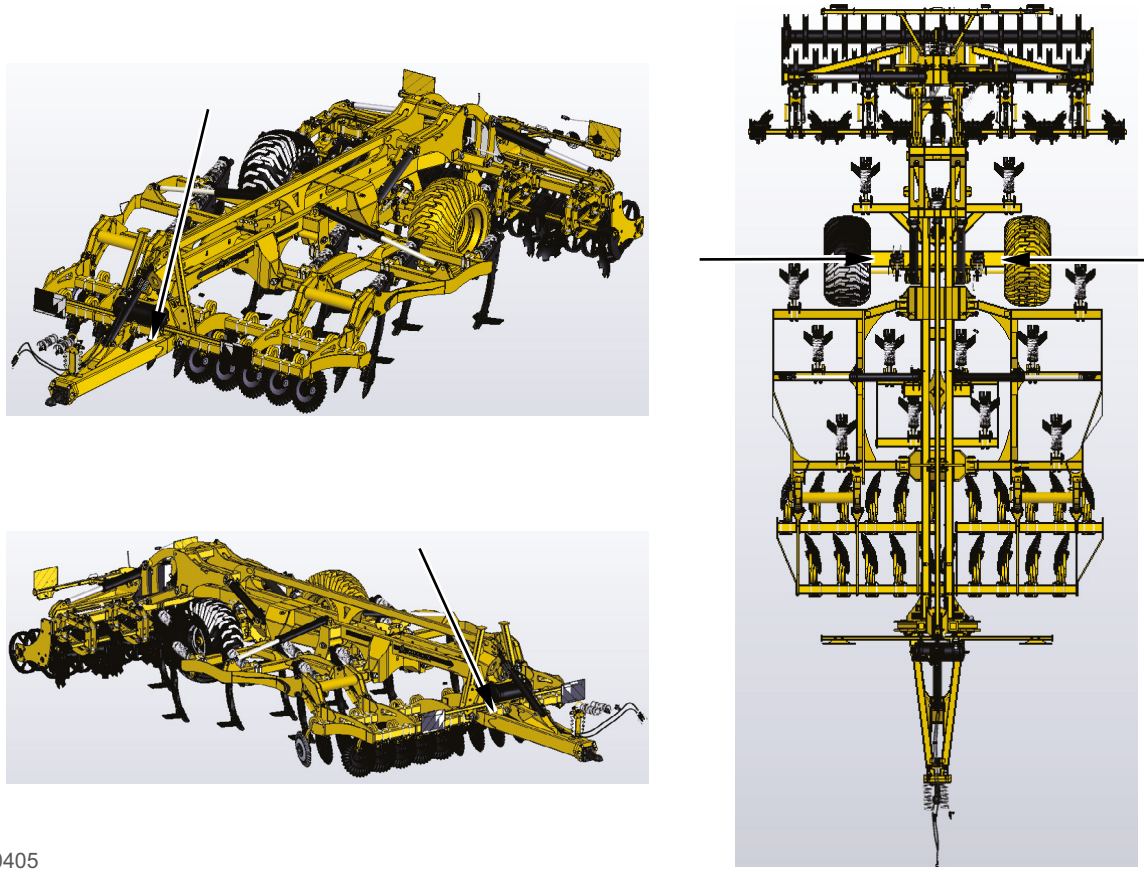

Fig. 93

8. Servicing - Maintenance

8.1. Maintenance tips

8.1.1. Introduction

Comply with the safety instructions regarding servicing and maintenance. The machine has been designed and built for maximum yield, profitability and comfort under many different usage conditions. It has been checked at the factory and by the dealer before its delivery to ensure that the machine is received in perfect condition. To maintain it in good working condition, it is important that servicing and maintenance operations are performed at the recommended frequency.

In order to ensure that the machine always operates correctly and to obtain an optimum performance, it must be cleaned and maintained at regular intervals. The hydraulic components and bearings must not be cleaned with a high-pressure washer or directly hosed down. The housings, screwed connectors and bearings are not watertight to VERY high pressure cleaning.

8.1.2. Personal protective equipment (PPE)

CAUTION

The maintenance operations involve the handling of loads and materials requiring the wearing of personal protective equipment.

This personal protective equipment must be worn while performing maintenance operations.

Risk	Examples of personal protective equipment
Cuts	Gloves
Crushing	Gloves, safety shoes, safety helmet
Hydrocarbons	Gloves
Dust	Mask
Noise	Ear protection

8.1.3. Shutting-down the machine

WARNING

Before performing any maintenance operation, the machine's hydraulic, mechanical and electrical power must be shut down. Chock the machine and take all of the necessary measures to avoid the accidental movement of the machine

8.1.4. Cleaning the machine

WARNING

Before performing any maintenance operations, the machine must be cleaned to prevent any risk of accidental injury.

8.1.5. Welding

NOTE

According to the type of machine: before carrying out any work on the electrical circuit or before any welding operations, disconnect the wiring harnesses coming from the tractor. Disconnect the battery and alternator cables.

WARNING

Do not weld or use blow torches near pressurised fluids or inflammable products.

CAUTION

Wear suitable personal protective equipment for welding work.

8.1.6. Protection devices

WARNING

Go around the machine looking for any external damage and checking the condition of the protection devices. The protection devices must be clean, legible and in good condition. If this is not the case, contact the AGRISEM INTERNATIONAL customer service department in order to replace them.

8.1.7. Tyres

DANGER

The tyres contain pressurised air. Never exceed the recommended inflation pressures.

WARNING

Regularly check the condition of the tyres over their entire surface.

WARNING

Remove all traces of oil from the tyres.

WARNING

The permissible load capacities of the tyres mounted on the tractor must not be exceeded.

8.1.8. Hydraulic system

WARNING

The machine is powered by pressurised hydraulic energy. Working on a pressurised circuit may give rise to risks of injury by contamination. All operations must be carried out by professionals trained to handle hydraulic technical equipment. In the event of an injury caused by hydraulic oil, consult a doctor immediately. Risk of infection.

DANGER

Do not, under any circumstances, attempt to plug a leak in the hydraulic hoses with your hand or fingers. Use a suitable leak-detection tool.

WARNING

Depressurise the hydraulic circuit completely before working on it.

When connecting hydraulic hoses to the tractor's hydraulic circuit, ensure that the hydraulic circuits on the tractor and machine are not under pressure.

NOTE

Using lubricants and mineral products in line with the recommendations does not represent any risk to health. However, avoid prolonged contact with the skin or avoid inhaling the vapours.

WARNING

Protect against direct contact with oils by wearing gloves or protective cream. Avoid the skin coming into contact with clothes that are soaked in oil. Change clothes and rags when they are dirty. Carefully wash all traces of oil off your skin with soap and hot water. Do not clean your skin with petrol, diesel or other detergent products.

Oil is toxic. In the event of ingestion of oil, consult a doctor immediately. If oil splashes in your eyes, rinse with clean water and consult a doctor if necessary.

WARNING

Keep lubricants out of reach of children.

Never store lubricants in open containers or containers that are not labelled.

WARNING

Soak up spilt oil with a binder product and dispose of it.

Never extinguish fires caused by oil with water. Only use authorised, appropriate extinguishing products and wear breathing apparatus.

WARNING

Check that the hydraulic hoses are correctly connected.

Regularly check that the hydraulic hoses and connections are in good condition and are clean.

NOTE

Hydraulic hoses must not be used for more than six years, including a possible storage time of two years maximum. Even under appropriate storage and usage conditions in line with permissible stresses, it is completely normal for hoses and connectors to age, which is why they have a limited storage time and service life.

Have the hydraulic hoses checked by a specialist at least once a year to ensure that they are in good condition.

Replace damaged or worn hydraulic hoses.

Only use genuine AGRISEM INTERNATIONAL hydraulic hoses.

Nevertheless, the duration of use can be established in line with empirical values, in particular taking potential risks into account. Other reference values can be taken into consideration for thermoplastic hoses and pipes.

Waste must not be disposed of in a conventional dustbin but collected through special channels in accordance with the applicable standards.

Dispose of used oil in line with current regulations. If this poses a problem, contact your oil supplier.

Dispose of shoes impregnated with oil as hazardous waste.

The product or its packaging is technically recyclable, not that it is or will be recycled.

The products will only be recycled under two conditions:

- The sorting and recycling channel exists in your region,
- The products have been correctly sorted.

Waste polluted by oil and used oil must be disposed of in line with current regulations.

Ensure that you do not contaminate the soil or water with hydraulic oil, follow the instructions indicated on the container of the consumable in accordance with current regulations.

8.1.9. Electrical

WARNING

According to the type of machine: before carrying out any work on the electrical circuit or before any welding operations, disconnect the wiring harnesses coming from the tractor.

WARNING

Before carrying out any work on the electrical system, disconnect the battery's negative terminal.

WARNING

Ensure the battery terminals are correctly connected, starting with the positive terminal, then the negative terminal. When disconnecting the terminals, start with the negative terminal, then disconnect the positive terminal.

Systematically fit the cover provided for this purpose on the positive terminal on the battery. Beware of the risk of explosion when earthing.

DANGER

Risk of explosion: avoid sparks and naked flames near the battery.

8.2. Maintenance consumables

Consumable	Characteristics	Volume
Grease	lithium grease reinforced with molybdenum disulphide / Grade NLG12	-

NOTE

Only use the specified consumables. AGRISEM INTERNATIONAL may not be held liable if another type of grease is used.

8.3. Maintenance schedule

NOTE

The servicing frequency is determined by many factors. Thus, different conditions of use, the weather, driving and working speeds, dust generation and the type of soil, etc. all influence the time before the next service is due, as does the quality of the lubrication and maintenance products used.

NOTE

The servicing frequencies indicated can therefore only serve as a guide. If you deviate from the normal conditions of use, you must adapt the frequency at which this maintenance and servicing is carried out to suit the conditions.

Maintenance operations to be carried out prior to each use
Check the hydraulic lines.
Check the lighting and signalling system.
Check the tyre pressure.

Maintenance operations to be carried out prior to folding
Clean the folding areas.

Maintenance operations to be carried out after the first 10 hours of operation
Check the tightness of the nuts and screws.
Check the hydraulic system (tightness and sealing).
Check the tightness of the wheel nuts.
Perform a complete diagnosis of the machine to ensure that there are no elements causing problems.
Clean the soil off the machine.

Maintenance operations to be carried out 50 hours or every 6 months
Check the tightness of the nuts and screws.
Check the hydraulic system (tightness and sealing).
Check the tightness of the wheel nuts.
Perform a complete diagnosis of the machine to ensure that there are no elements causing problems
Lubricate the joints with grease guns.
Clean the soil off the machine.
Adjust the braking system.

Maintenance operations to be carried out after each pressure wash
Lubricate the machine.

Maintenance operations to be carried out 100 hours or every 12 months
Wear rings

Maintenance operations to be carried out every 6 years
Replace the hydraulic hoses.

8.4. Maintenance operations

8.4.1. Check the hydraulic lines

Inspection criteria for hydraulic hoses

CAUTION

For your own safety, comply with the following inspection criteria.

If one of the following faults is observed, immediately change the hydraulic hose:

- Deterioration of the outer layer down to the lining (e.g. friction points, cuts, splits).
- Embrittlement of the outer layer (formation of cracks on the outer layer).
- Distortions which do not correspond to the natural shape of the hose or pipe, whether or not they are under pressure or bent (e.g. separation of the layers, bulges, crushed areas, bending).
- Areas that are leaking.
- Damaging or distortion of the end fitting (affecting its leak tightness). Slight superficial damage does not warrant replacement.
- Hose becoming detached from the end fitting.
- Corroded end fitting leading to reduced solidity and function.
- Non compliance with mounting specifications.
- Exceeding of the 6-year usage period. The following information is vital: the date of manufacture of the hydraulic hose marked on the end fitting, to which you must add 6 years. If the date of manufacture indicated on the connector is "2004" the usage period will end in February 2010.

Fitting and removing hydraulic hoses

WARNING

When fitting and removing hydraulic hoses, the following instructions must be strictly adhered to:

- Only use genuine AGRISEM INTERNATIONAL hydraulic hoses.
- Always ensure cleanliness.

- Always fit hydraulic hoses in such a way that in all operating conditions:
  - They are not subject to tension other than that caused by their own weight.
  - There is no crushing over short lengths.
  - There are no external mechanical stresses on the hydraulic hoses.
  - Avoid hoses rubbing against parts of the machine or against each other by arranging and attaching them correctly. Protect hydraulic hoses with protective sheaths if necessary. Cover parts with sharp edges.
  - The authorised bending radii are not exceeded.
- If hydraulic hoses are connected to moving parts, measure the length of the hose to ensure that the total range of movement is no less than the smallest authorised bending radius and/or that the hose is not subject to tension.
- Attach hydraulic hoses at the locations provided for this purpose. Avoid mountings that may hinder the natural movement of the hose and modifications to its length.

WARNING

Hydraulic hoses must not be painted.

Marking of hydraulic hoses

Hoses must be replaced after 6 years from their date of manufacture.

The hydraulic hoses have markings indicating their year of manufacture.

No.	Description
1	Month of manufacture
2	Year of manufacture
3	Batch no.

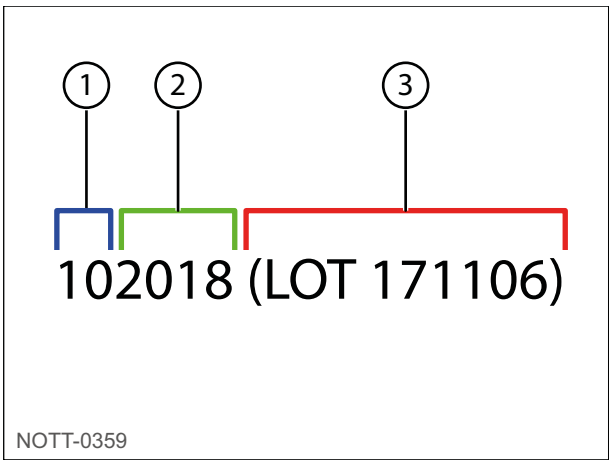

Fig. 94

8.4.2. Check the lighting and signalling system

Always check that your lighting system is in full working order and clean before driving on the road.

WARNING

Never set out on the public highway if one of these elements is not in good condition.

Replacing bulbs:

1 - Unscrew the protective glass.

2 - Remove the faulty bulb.

8.4.3. Clean the folding areas

The folding areas must be cleaned each time before folding. The accumulation of earth, of stones or other obstacles may result in damage to the machine

Failure to observe this requirement will void the warranty.

Series 3

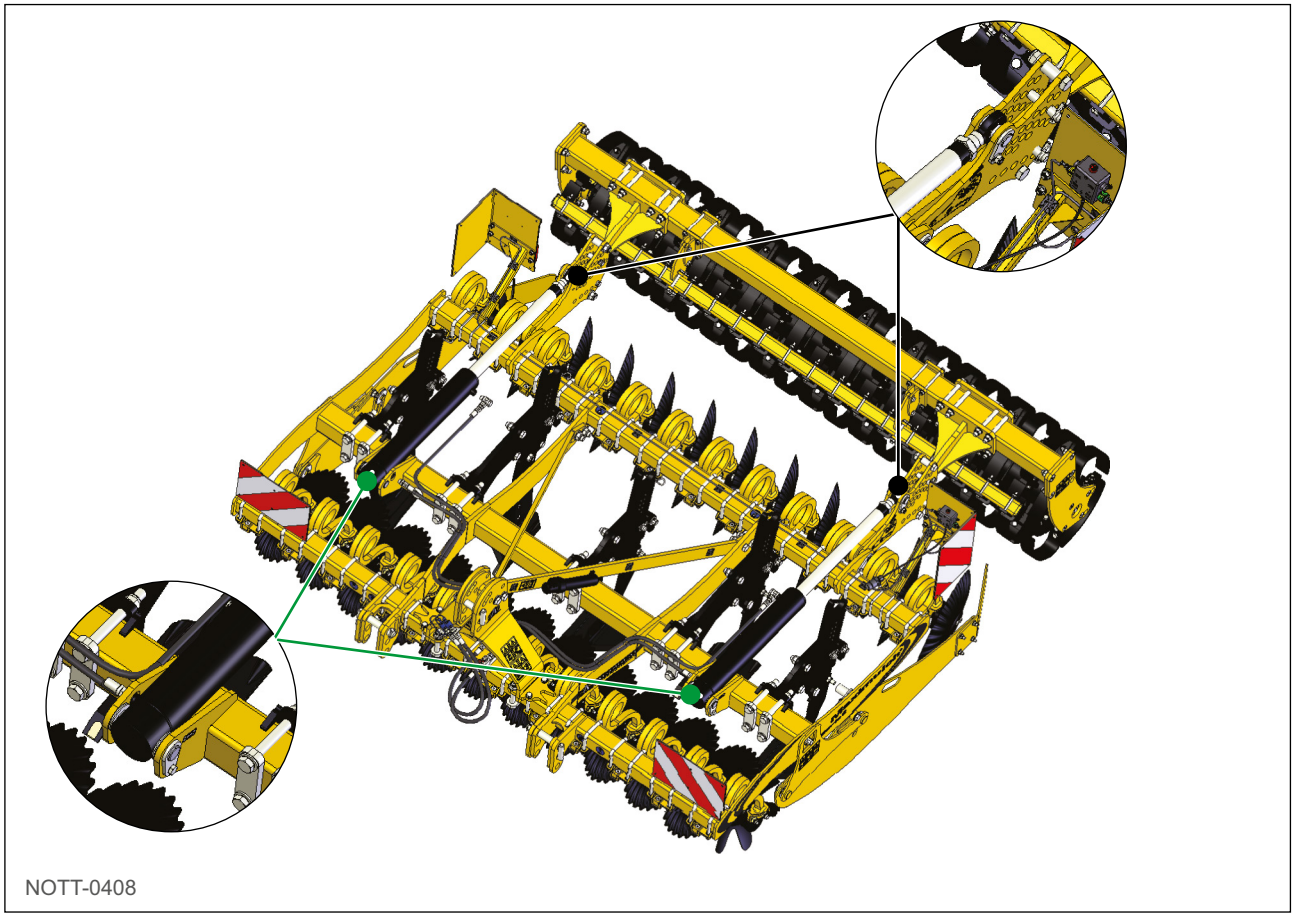

Fig. 95

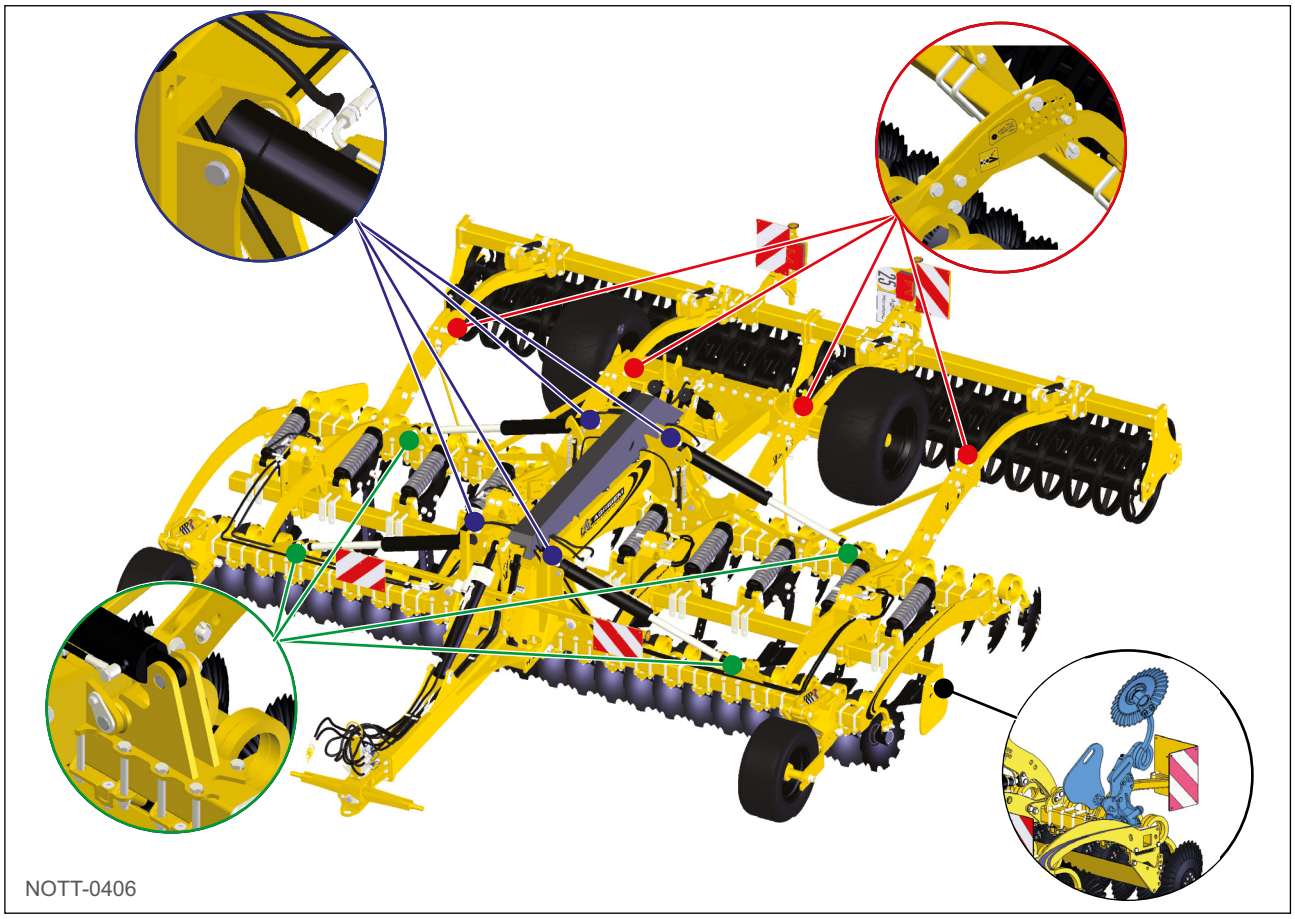

Fig. 96

Series 5

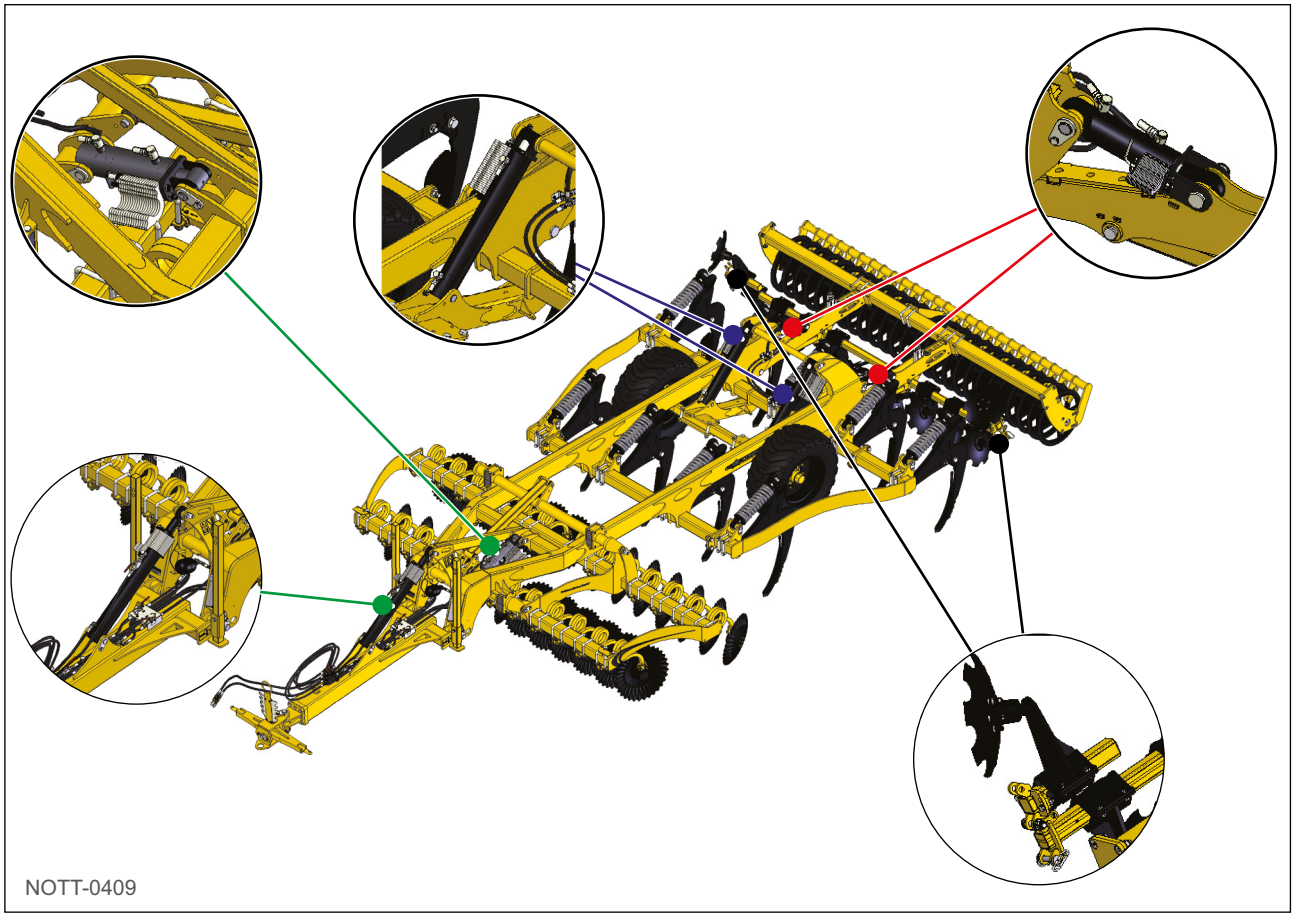

Fig. 97

Series 6

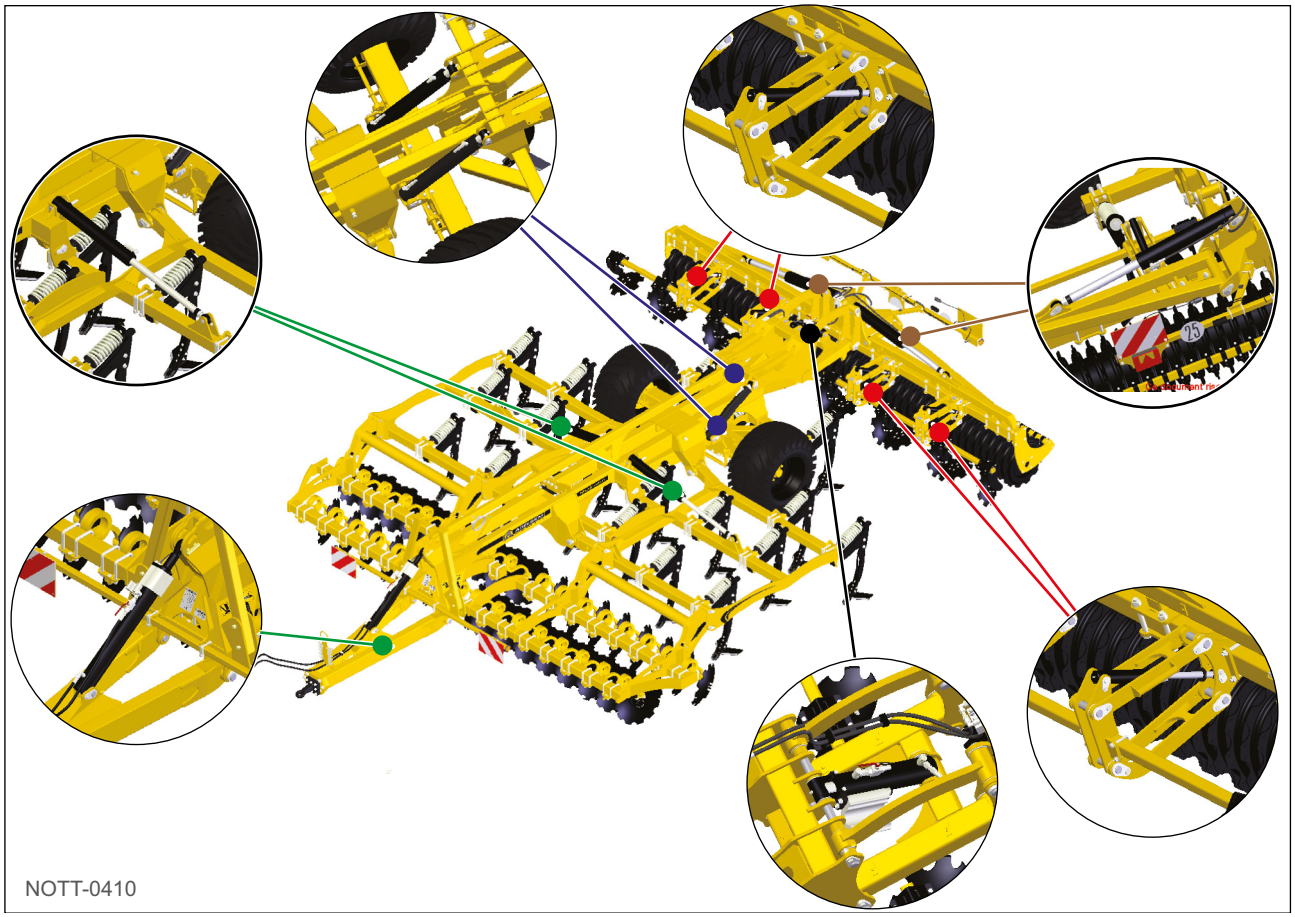

Fig. 98

8.4.4. Check the tightness of the nuts and screws

Refer to the table.

ISO 272			Classe de qualité boulonnerie acier ISO898-1													
			5,6		5,8		6,8		8,8*		9,8**		10,9		12,9	
d mm	ISO mm	mm	Cs	Fo	Cs	Fo	Cs	Fo	Cs	Fo	Cs	Fo	Cs	Fo	Cs	Fo
1,6**	0,35	3,2	0,086	210	0,120	294	0,137	335	0,183	447	0,206	503	0,269	657	0,315	769
2**	0,40	4	0,183	349	0,256	488	0,293	558	0,390	744	0,439	837	0,573	1 093	0,671	1 279
2,5**	0,45	5	0,383	582	0,536	815	0,612	931	0,816	1 242	0,918	1 397	1,20	1 824	1,40	2 134
3	0,50	5,5	0,66	874	0,92	1 224	1,06	1 399	1,41	1 866	1,60	2 099	2,07	2 740	2,43	3 207
4	0,70	7	1,51	1 514	2,11	2 120	2,42	2 422	3,22	3 230	3,66	3 635	4,74	4 744	5,5	5 552
5	0,80	8	3,00	2 481	4,20	3 473	4,81	3 970	6,4	5 293	7,27	5 958	9,4	7 774	11,0	9 098
6	1	10	5,2	3 498	7,2	4 893	8,3	5 598	11,1	7 464	12,57	8 392	16,3	10 962	19,1	12 828
8	1,25	13	12,6	6 426	17,7	8 997	20	10 283	27	13 710	30,62	15 423	39	20 137	46	23 565
10	1,50	16	25	10 238	35	14 334	40	16 382	53	21 843	61	24 575	78	32 082	92	37 542
12	1,75	18	43	14 934	60	20 908	69	23 895	92	31 860	105	35 849	136	46 795	159	54 760
14	2	21	69	20 514	97	28 719	111	32 822	148	43 763	167	49 142	218	64 277	255	75 218
16	2	24	108	28 280	152	39 592	174	45 248	232	60 331	262	67 944	341	88 611	399	103 694
18	2,5	27	149	34 324	209	48 054	239	54 919	330	75 421			469	107 549	549	125 856
20	2,5	30	213	44 188	298	61 863	341	70 700	471	97 253			667	138 456	781	162 023
22	2,5	34	293	55 298	411	77 418	470	88 478	648	121 574			920	173 269	1 077	202 762
24	3	36	366	63 630	513	89 083	586	101 809	809	140 084			1 148	199 376	1 343	233 313
27	3	41	544	83 910	762	117 474	871	134 257	1 201	184 517			1 706	262 920	1 997	307 672
30	3,5	46	737	101 914	1 032	142 679	1 180	163 062	1 628	224 292			2 311	319 331	2 704	373 685
33	3,5	50	1 004	127 210	1 406	178 094	1 607	203 536	2 216	279 953			3 148	398 593	3 684	466 438
36	4	55	1 288	149 174	1 803	208 844	2 060	238 679	2 840	328 236			4 036	467 413	4 723	546 973
39	4	60	1 677	179 487	2 348	251 282	2 683	287 179	3 697	394 919			5 255	562 393	6 150	658 119
42**	4,5	65	2 070	205 323	2 898	287 452	3 312	328 516	4 554	451 710			6 486	643 344	7 590	752 849
45**	4,5	70	2 596	240 641	3 635	336 897	4 154	385 025	5 712	529 410			8 136	754 008	9 520	882 350
48**	5	75	3 130	270 321	4 383	378 449	5 009	432 514	6 887	594 706			9 809	847 006	11 478	991 177
52**	5	80	4 041	324 763	5 657	454 668	6 465	519 620	8 889	714 478			12 661	1 017 590	14 816	1 190 797
56**	5,5	85	5 034	374 739	7 048	524 635	8 054	599 582	11 075	824 426			15 773	1 174 182	18 458	1 374 043
60**	5,5	90	6 266	438 337	8 772	613 672	10 026	701 340	13 785	964 342			19 634	1 373 457	22 976	1 607 237
64**	6	95	7 533	495 676	10 546	693 947	12 052	793 082	16 572	1 090 488			23 603	1 553 119	27 620	1 817 480

Classe 8-8a jusqu'a d=16 mm, 8-8b à partir de d=118 mm

NOTT-0229

Fig. 99

8.4.5. Check the hydraulic system (tightness and sealing)

Check that all of the hydraulic circuit's components are sealed. If necessary, tighten screwed connectors.

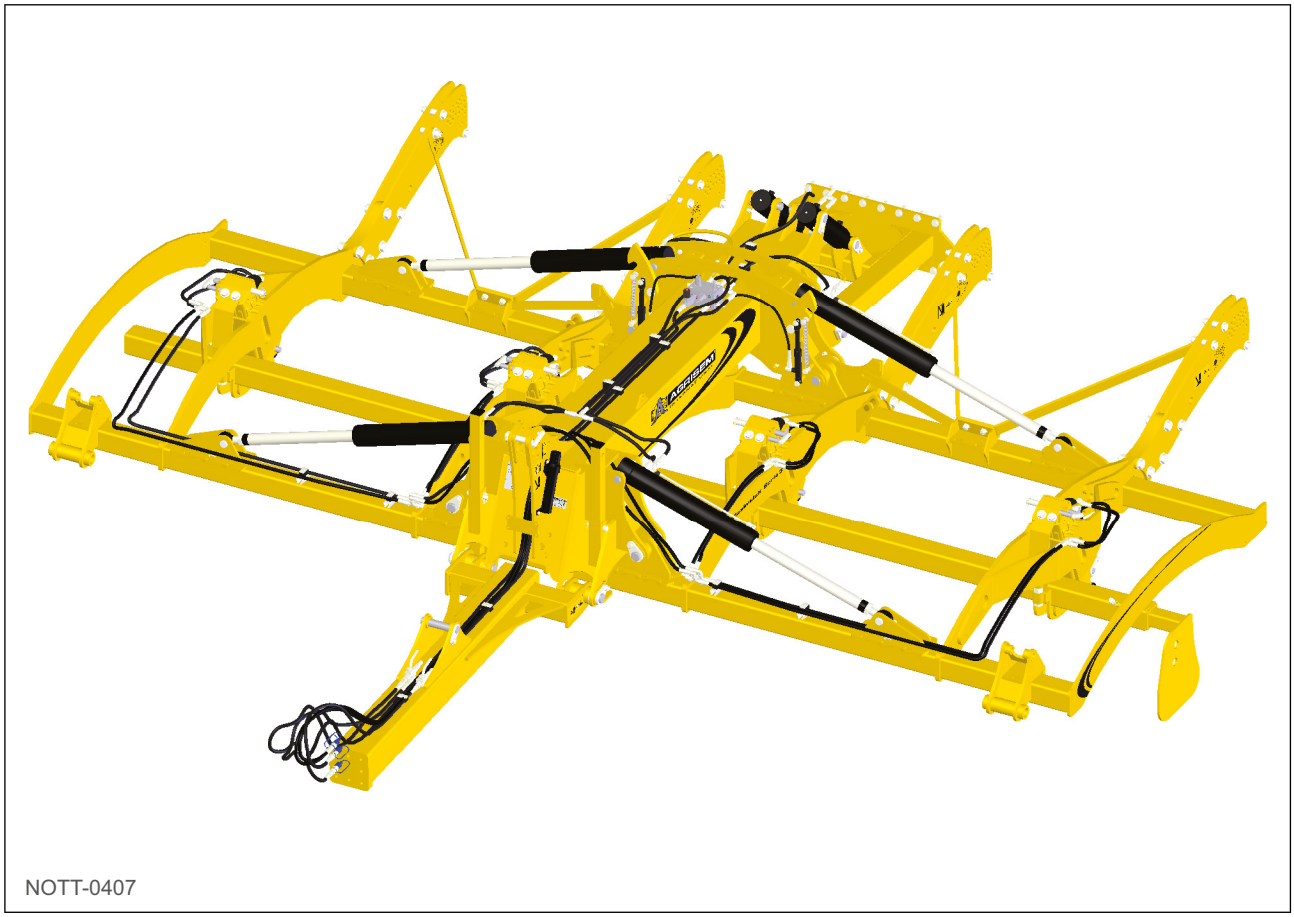

Fig. 100

8.4.6. Check the tightness of the wheel nuts

Refer to the instruction of the axle supplier attached.

8.4.7. Perform a complete diagnosis of the machine

Carry out all the operations of the start-up section.

Carry out all the maintenance operations to be performed prior to each use.

8.4.8. Clean the soil off the machine

Clean the soil on the machine with a high pressure cleaner.

CAUTION

If using a high-pressure washer or steam cleaner, it is essential to comply with the following points:

- Do not clean the electrical and hydraulic components.
- Never direct the high-pressure washer or steam cleaner nozzle directly at the lubrication points or bearings.
- Systematically keep the nozzle a reasonable distance from the machine.

Comply with the rules for using high-pressure washers.

The machine must be lubricated regularly and after each pressure wash.

8.4.9. Lubricate the joints with grease guns

The lubrication points are identified by this pictogram.

The machine must be lubricated regularly and after each pressure wash.

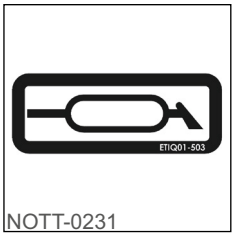

Fig. 101

CAUTION

The machine must be lubricated regularly and after each pressure wash.

This keeps the machine in good working order and reduces the costs of repairs and downtime.

Series 3

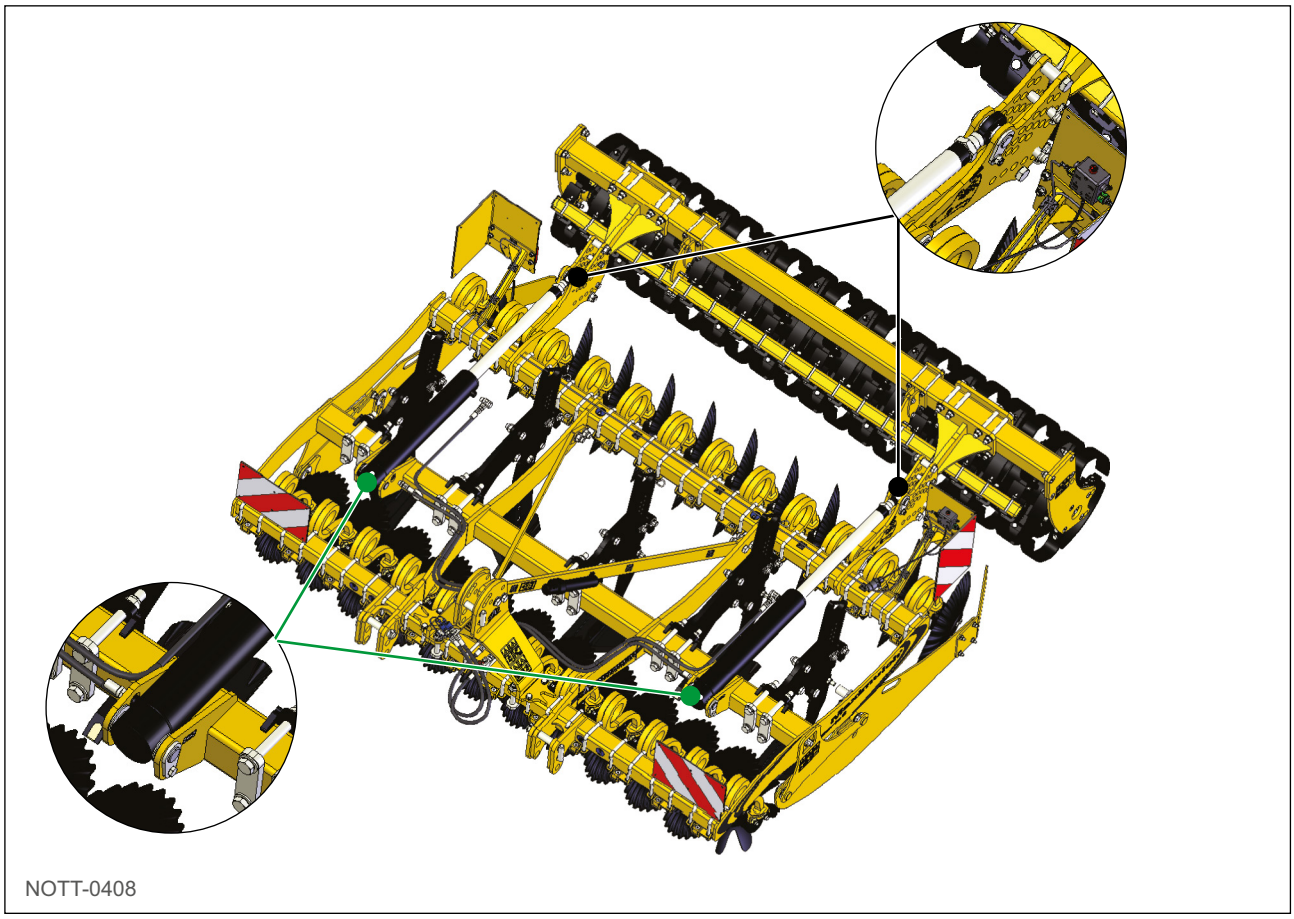

Fig. 102

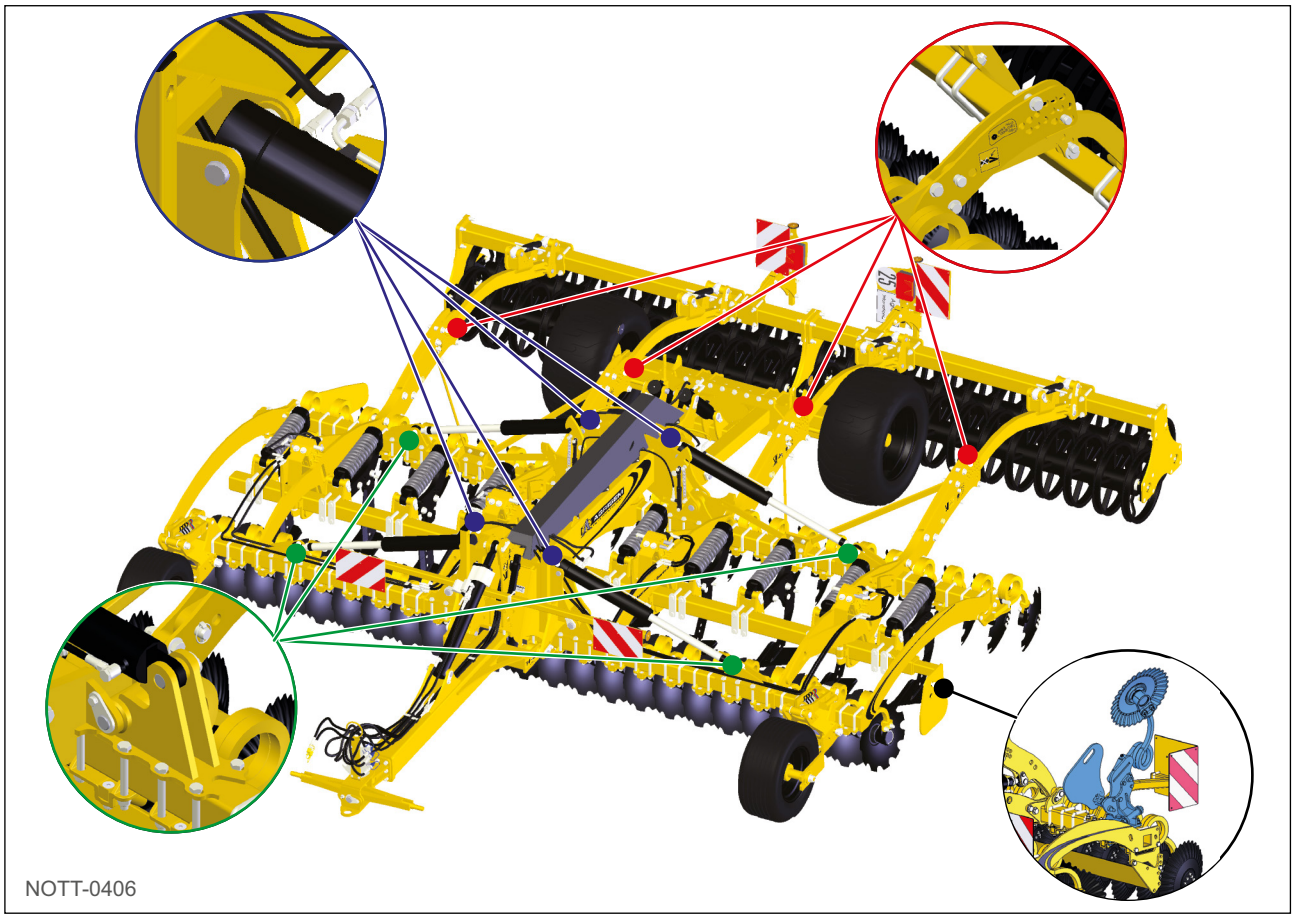

Fig. 103

Series 5

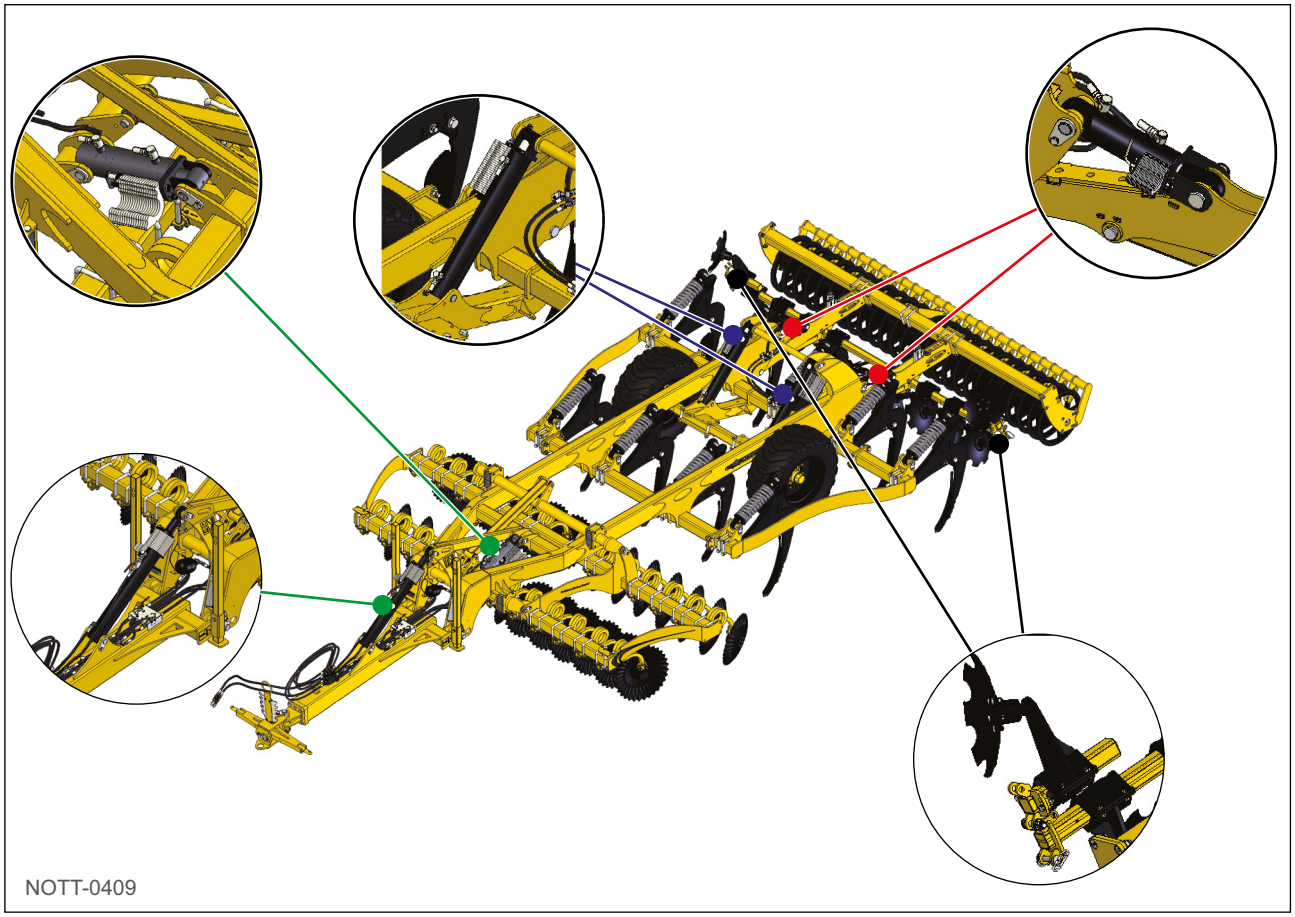

Fig. 104

Series 6

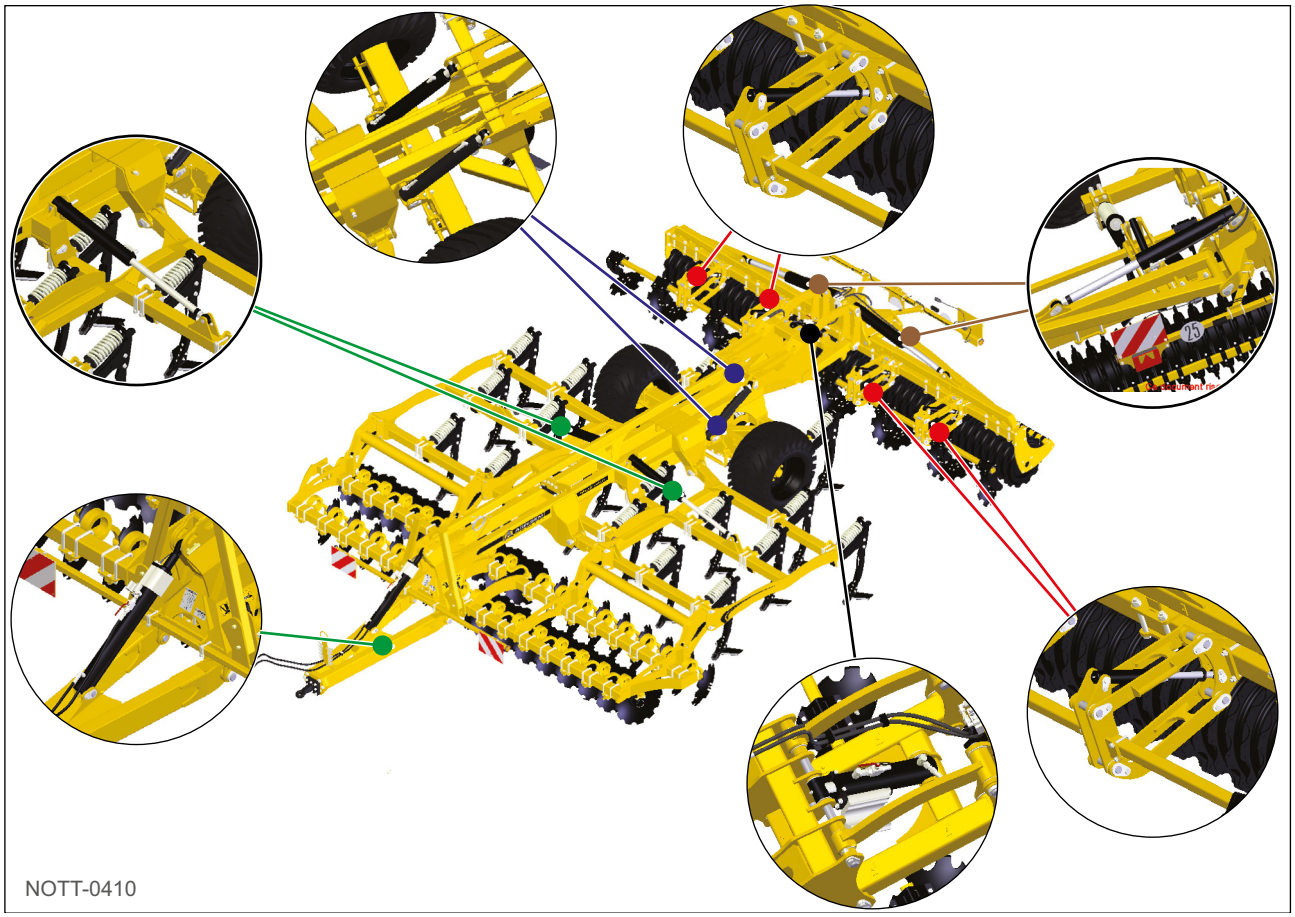

Fig. 105

8.4.10. Replace the hydraulic hoses

After replacing all the machine's hoses, check that all of the components of the hydraulic system are sealed, see “8.4.5. Check the hydraulic system (tightness and sealing)”, page 108.

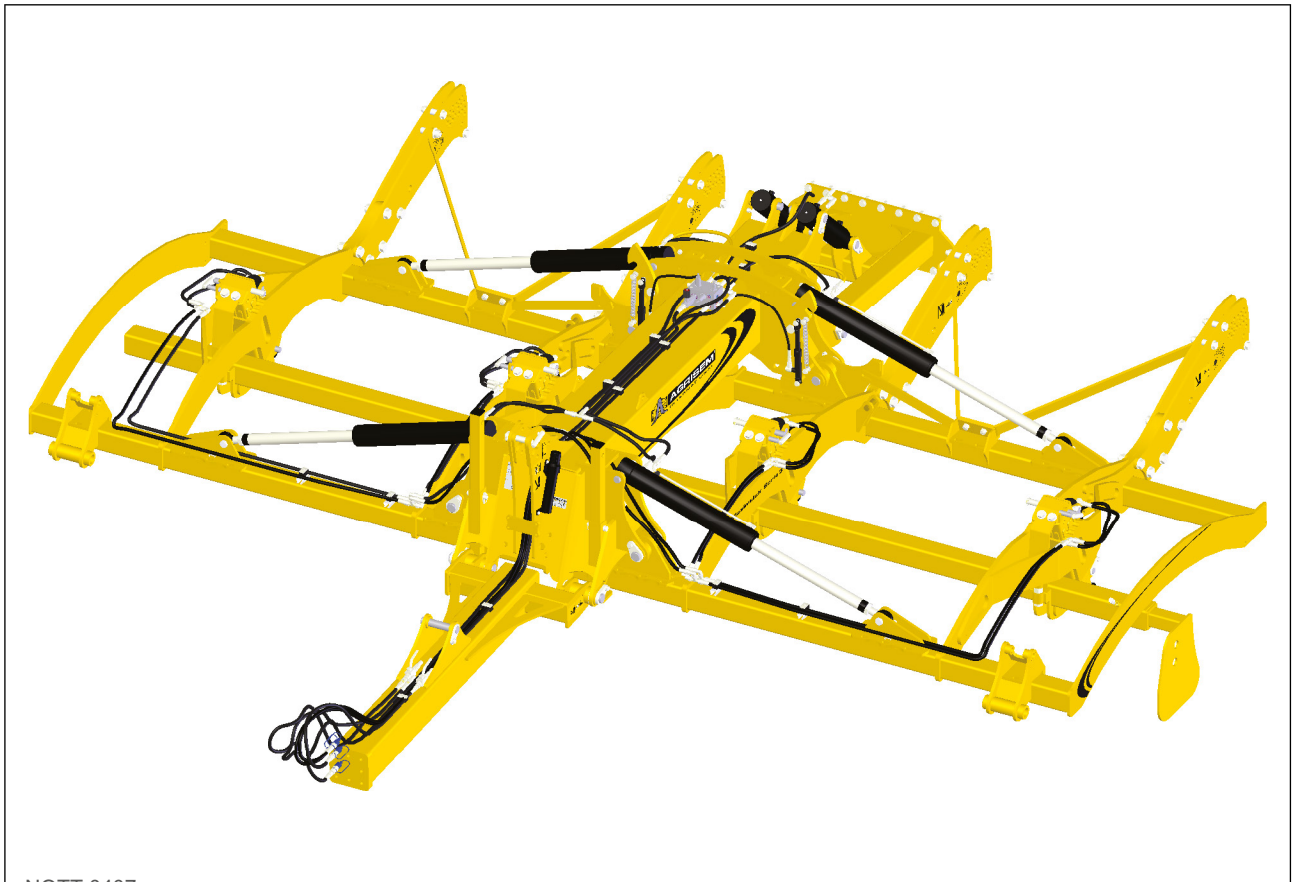

NOTT-0407

Fig. 106

8.4.11. Wear rings

Wear rings must be replaced when the wearing strip is completely worn, when wear causes jamming or hard spots. The wearing strip is approximately 1,5 mm thick.

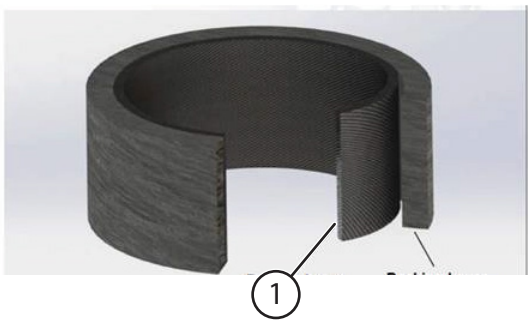

NOTT-0357

Fig. 107

Depending on the mounting and options wear rings are provided at the pivot points of the machine.

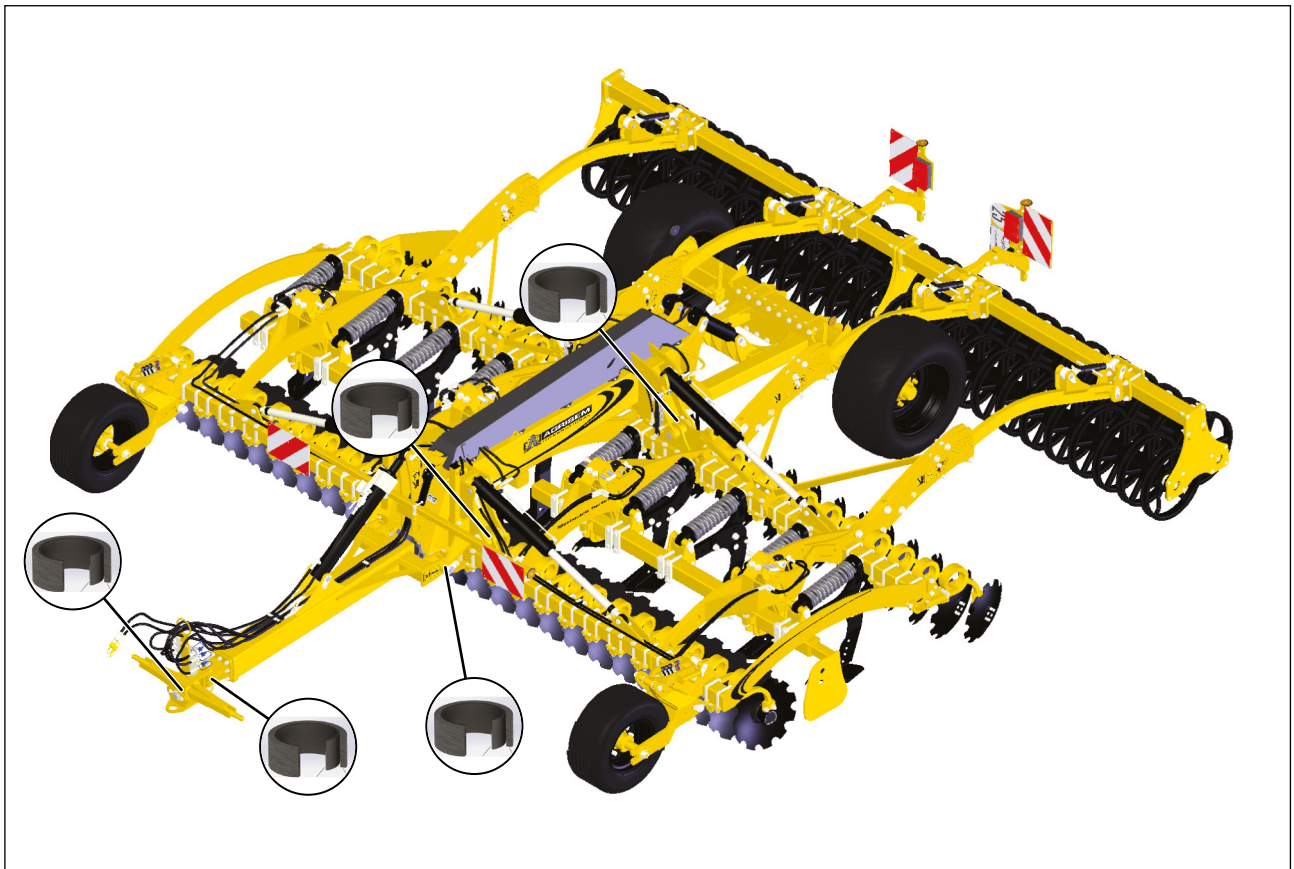

Fig. 108

8.4.12. Disc wear

Discs must be replaced as soon as their diameters reach the values given below.

Disc	New disc diameter (mm)	Max. acceptable wear diameter (mm)
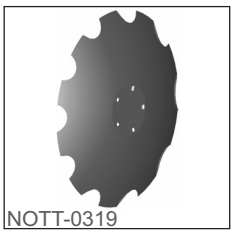 NOTT-0319	ø 460	ø 400
	ø 510	ø 440
	ø 560	ø 480
	ø 610	ø 520
NOTT-0318	ø 510	ø 430
	ø 560	ø 430
	ø 610	ø 430

CAUTION

AGRISEM INTERNATIONAL cannot be held liable if the Maximulch is used with discs presenting greater wear than that specified above.

NOTE

If the machine is stored out-of-doors during the winter, it is important that it is stored in the working (i.e. Unfolded) position. This will avoid water from rain or snow being stored on the disc and entering into the hub during the storage period. This would irreparably damage the hub bearing and thus its durability. The warranty will no longer apply if traces of water or moisture are found when inspected in connection with a warranty claim.

IMPORTANT

Do not spray the high-pressure water jet onto the hubs at the risk of breaking the seal and allowing water to enter. In such a case, no warranty claim will be considered.

8.4.13. Tyre pressures

System	Mean pressure	Maximum pressure
Main axle	2.5 bar	4.1 bar

8.4.14. Wear part with carbide plates

Wear parts with carbide plates are designed for working in fields without stones.

Using them on stony ground may lead to the premature wearing of these parts and possible breaking.

It is the user who must decide on and take full responsibility for the risks linked to the use of wear parts fitted with carbide plates under these conditions.

AGRISEM INTERNATIONAL cannot be held liable under any circumstances for the premature wearing or breaking of wear parts with carbide plates if these instructions are not complied with.

8.4.15. Braking system adjustment

1 - Lift the axle, the tyre must no longer be in contact with the ground

2 - Release the parking brake system.

3 - Turn the adjusting nut (1) clockwise to bring the brakes into contact and until the wheel no longer rotates.

4 - Turn the adjusting nut (1) anti-clockwise, stop when the wheel rotates freely.

5 - Check the brake by applying the handbrake a few notches, and check that the wheels no longer turn.

6 - Release the handbrake.

7 - Check that the braking cylinder stroke is identical when the axle is in the working position and in the transport position.

If the cylinder stroke is identical, adjustment is completed.

If the stroke varies, restart the adjustment from step 3.

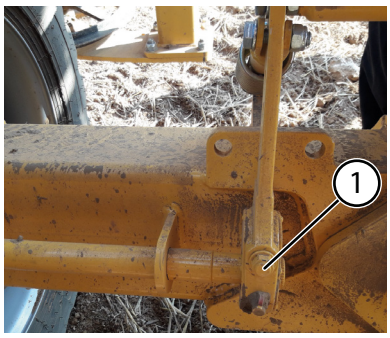

NOTT-0360

Fig. 109

9. Faults, causes and remedies

Problem	Point to be checked	Remedial solution
The Maximulch is veering to one side or the other.	Working depth	Check that the working depth is the same on both rows of discs.
The Maximulch is not working at the same depth on the right and the left.	Tractor lift links	The tractor's lift links must be set to the same length.
A ridge forms between 2 passes of the Maximulch.	Border spreading disc	Adjust the border spreading disc setting.
Clogging of the discs.	Working depth	Reduce the working depth of the Maximulch.
	Disc wear	Replace the discs.
Irregular working depth.	Adjustment of the extensions	Adjust the extensions.

10. Characteristics

10.1. Series 3

Common characteristics	
Type of discs	Independent
Type and size of security system	Individual rubber blocks
Type of hubs	SR 80
Front disc diameter	560 mm
Side deflector	As standard
Height under frame	57 cm
Clearance between elements	80 cm
Working depth	30 cm
Frame cross-section	100 x 100 (discs) 120 x 120 (blade)
Disc pressure	100 - 200 kg
Braking	Hydraulically assisted
Hitch category	Cat. 3
Transport wheels	500/45x22.5

10.1.1. Fixed tractor-mounted

	3 m	3.50 m	4 m
Working width (m)	3	3.5	4
Transport width - without accessories (m)	3	3.5	4
Min-max recommended power (Hp)	160- 210	200- 250	240- 290
Weight with bolt safety system and Ø526 cage roller (kg)	2152	2435	2738
Weight with spring safety system and Ø526 cage roller (kg)	2542	2903	3284
Number of discs	21	25	29
Number of TCS blades	5	6	7

10.1.2. Folding trailed

	4.50 m		6 m	
Working width (m)	4.5	4.5	6	6
Transport width - without accessories (m)	3	3	3	3
Min-max recommended power (Hp)	180- 240	180- 240	250- 350	250- 350
Weight with bolt safety system and Ø526 cage roller (kg)	7765	7855	9420	9510

	4.50 m		6 m	
Weight with spring safety system and Ø526 cage roller (kg)	8272	8415	10140	10280
Number of discs	36+1	36+1	48+1	48+1
Number of TCS blades	6	8	8	10

10.2. Series 5

Common characteristics	
Type of discs	Independent
Type and size of security system	Individual rubber blocks
Type of hubs	SRE
Front disc diameter	610 mm
Blades	AGM HD or TCS 550
Side deflector	As standard
Height under frame	57 cm
Inter-disc clearance	89 cm
Working depth	30 cm
Frame cross-section	100 x 100 (discs) 120 x 120 (blade)
Disc pressure	100 - 200 kg
Braking	Hydraulically assisted
Hitch category	Cat. 3
Transport wheels	500/45x22.5

10.2.1. Fixed trailed

	3 m	4 m
Working width (m)	3.00	4.00
Transport width - without accessories (m)	3.00	4.00
Min-max recommended power (Hp)	180- 320	240- 450
Weight with spring safety system and Ø526 cage roller (kg)	5220	6220
Number of discs	17	25
Number of TCS blades	7	9

10.2.2. Folding trailed

	4 m	5 m
Working width (m)	4.00	5.00
Transport width - without accessories (m)	3.00	3.00
Min-max recommended power (Hp)	240- 450	300- 500
Weight with spring safety system and Ø526 cage roller (kg)	7800	8560
Number of discs	25	29
Number of TCS blades	9	11

10.3. Series 6

Common characteristics	
Type of discs	Independent
Type and size of security system	Individual rubber blocks
Type of hubs	SRE
Front disc diameter	610 mm
Blades	AGM HD / TCS 550 / fissuring blade
Side deflector	As standard
Height under frame	57 cm
Inter-disc clearance	89 cm
Working depth	30 cm
Frame cross-section	100 x 100 (discs) 120 x 120 (blade)
Disc pressure	100 - 200 kg
Braking	Hydraulically assisted
Hitch category	Cat. 3
Transport wheels	500/45x22.5

	4 m	5 m	6 m
Working width (m)	4.00	5.00	6.00
Transport width - without accessories (m)	3.00	3.00	3.00
Min-max recommended power (Hp)	200- 300	280- 380	350- 450
Weight with spring safety system and Ø526 cage roller (kg)	8270	9360	10450
Number of discs	20+2	27+2	34+2
Number of TCS blades	13	15	19

11. Technical terms and abbreviations

Term	Meaning
A	ampere - unit of intensity of electrical current
bar	bar - unit of pressure
cm	centimetre - unit of length
cm^3	cubic centimetre - unit of volume
PPE	personal protective equipment
ha	hectare - unit of area
ISOBUS	standard data transfer system
kg/h	kilogram per hour - unit of mass flow
kg/ha	kilogram per hectare - unit of density
km/h	kilometre per hour - unit of speed
l	litre - unit of volume
l/min	litre per minute - unit of flow
LS	load sensing - hydraulic load detection system
m	metre - unit of length
mm	millimetre - unit of length
rpm	revolution per minute - unit of speed of rotation
V	volt - unit of voltage
W	watt - unit of power

12. Appendices

DECLARATION OF CONFORMITY WITH THE “MACHINERY” DIRECTIVE

The manufacturer referred to above certifies that the new equipment described below:

MAXIMULCH

Complies with the provisions of the amended "Machinery" directive (Directive 2006/42/EC) and with the applicable national legislation.

Ligné,

21 May 2013

Michal GUZOWSKI

CEO

DECLARATION OF CONFORMITY WITH THE “MACHINERY” DIRECTIVE

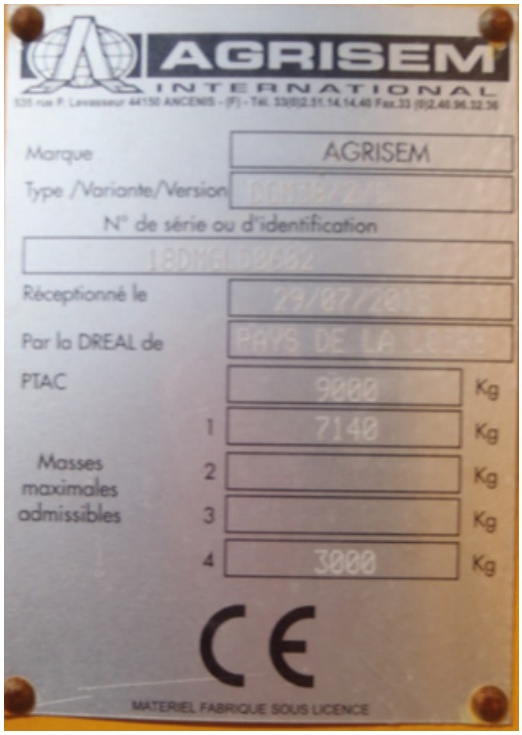

The manufacturer referred to above certifies that the new equipment described below:

MAXIMULCH

Complies with the provisions of the amended "Machinery" directive (Directive 2006/42/EC) and with the applicable national legislation.

Ligné,

21 May 2013

Michal GUZOWSKI

CEO

AGRISEM INTERNATIONAL

WARRANTY CERTIFICATE No.

TO BE RETURNED UPON RECEPTION OF THE MACHINE

Dealer	Purchaser
Name	Name
Address	Address
Tel.:	Tel.:
Code no.	

Type of machine	
Working width	
Machine serial number	
Date of delivery to customer and user	
Make, model and et power of tractor used	
Type of soil - % clay	
Utilised agricultural land belonging to the farm	

Place: date:

Purchaser's signature and stamp	Dealer's signature and stamp

We acknowledge that we have read the whole of the user manual and the warranty terms to which we adhere.

AGRISEM INTERNATIONAL SA - 535 rue Pierre Levasseur - CS 60263 - 44158 ANCENIS - FRANCE
Tel.: +33 (0)2.51.14.14.40 - Fax: +33 (0)2.40.96.32.36

WARRANTY CLAIM FORM No.			
Name of the dealer		Dealer stamp	
Claim managed by			
Date of purchase of the machine		AGRISEM invoice number	
Name and address of user customer			
Date of delivery to user *(attach a copy of the invoice and the dealer's delivery slip)*		UAA of farm(s)	
Machine serial number		Working width	
Description of the equipment combination (make and type)			
Make of tractor used			
Model of tractor used		Power rating	
Detailed description and alleged cause of the incident			
Date of breakdown		Current date	
Part reference	Quantity	Description	
Send parts requested	**YES**	Credit note requested	**YES**
Photographs attached	**YES**	Parts returned *Freight costs payable by the sender*	**YES**
Result of inspection by AGRISEM INTERNATIONAL			
Comments			
Date		Signature	
Technical manager			
agrisem@agrisem.com			

AGRISEM INTERNATIONAL SA - 535 rue Pierre Levasseur - CS 60263 - 44158 ANCENIS - FRANCE
Tel.: +33 (0)2.51.14.14.40 - Fax: +33 (0)2.40.96.32.36