User manual

Turbomulch Extra Trailed

EN - Original Manual

AGRISEM INTERNATIONAL SA
535Pierre Levasseur Street
CS 60263
44158ANCENIS
FRANCE
Tel.: 02.51.14.14.40

NOTT-EN-631-A 09/08/2026

Table of Contents

PREAMBLE 5

1. Introduction 6

1.1. Purpose of the user manual 6
1.2. Use the instructions 6
1.3. Order the instructions 7
1.4. Interpreting the version of the instructions 7
1.5. Description of warning terms 7

2. Machine presentation 9

2.1. Intended use of the equipment 9
2.2. General view of the machine 10

Identification 12

3.1. Validity of the user manual 12
3.2. Plate identification location and description 12

4. Warranty 14

4.1. Warranty Conditions 14
4.2. Exclusion of Liability Clause 17

5. Safety instructions 19

5.1. Safety instructions 19
5.2. Safety symbols on the machine 33

6. Usage 37

6.1. Location and description of commands 37
6.2. Commissioning 39
6.3. Coupling/uncoupling 40
6.4. Folding / Unfolding 42
6.5. Driving 44
6.6. Adjusting the working depth 46
The depth of the combs can be adjusted both from the cab (hydraulic adjustment) and on the machine. 47
6.7. Fieldwork 48

7. Storage - Handling - Transport 49

7.1. Storage 49
7.2. Handling 49
7.3. Transport 51

8. Maintenance 52

8.1. Maintenance advice 52
8.2. Maintenance Consumables 56

8.3. Maintenance Schedule 56
8.4. Maintenance Operations 57
9. Breakdowns, causes and remedies 63
10. Characteristics.....65
11. Technical terms and abbreviations 65
12. Annexes.....69

PREAMBLE

Thank you for your trust you granted us by making yourself the owner of equipment
AGRISEM INTERNATIONAL.

This manual has been provided with your machine to enable you to make optimal use of the equipment purchased and in particular to comply with safety conditions.
All purchasers are reminded that the manual is an integral part of the machine and that in the event of resale, Article 1615 of the Civil Code requires that, as an accessory, it be passed on to the new owner.
It is also recalled that since the manual is an integral part of the machine, every owner undertakes to leave it physically available with the machine for any user.
This manual contains the specifications of your new equipment. Please read this manual and ensure that all users follow the instructions it contains carefully. The following pages will provide you with essential information about your machine; please read them carefully.
Your AGRISEM INTERNATIONAL dealer will ensure quality maintenance and all the assistance you may need. For maintenance, remember that your dealer knows your machine best and wants to ensure your complete satisfaction.
All information and specifications in this manual are current at the time of printing. However, our policy of continuous product improvement requires us to reserve the right to proceed, has at any time and without notice, subject to changes.
This user manual is published for wide distribution, and the availability of the equipment listed, whether on the base machine or as an accessory, may vary depending on the region where the machine is used. All combinations available at the time of publication of this user manual will be described within it.

1. Introduction

1.1. Purpose of the user manual

You have just taken possession of your AGRISEM INTERNATIONAL machine.This one has been designed to give you complete satisfaction.

The equipment has been specifically designed by adopting new solutions to reduce the cost of use.

However, to use your AGRISEM INTERNATIONAL machine correctly and get the most out of it, read this manual carefully before of Put it into operation and strictly follow the instructions given in this user manual. In particular, carefully follow the adjustment, maintenance, and safety instructions.

For any information or advice: our distributor is your contact person.

This user manual is an integral part of the machine and must always accompany the machine, especially in the event of resale.

Keen to improve its products, AGRISEM INTERNATIONAL reserves the right to modify or improve its manufacturing processes without being obliged to pass on these modifications or improvements to products already on the market.

The instructions contained in this manual are not exhaustive and cannot cover all possible scenarios. The user must comply with the legislation applicable notably in terms of safety, ensure compliance with the rules of caution and safety dictated by each situation, exercise common sense and adapt the use of the machine to the specific circumstances.

It is the responsibility of each buyer to verify that the AGRISEM INTERNATIONAL machine complies with the laws and regulations of its final destination.



HAZARD

This user manual must be read, understood and followed by all persons responsible for carrying out work on or with the machine, in particular :

- use (including preparation, troubleshooting during operation and maintenance),
- maintenance (upkeep and inspection),
- transportation.

AGRISEM INTERNATIONAL declines all responsibility for any personal injury, property damage, or malfunctions resulting from failure to comply with the manufacturer's instructions in this manual.



IMPORTANT

Information AGRISEM INTERNATIONAL

Return the warranty certificate within 15 days and attach a copy of the invoice (without return of these documents, the warranty procedure cannot be implemented).

1.2. Use the instructions

1.2.1. Functional Organization

Where possible, the content of the user manual is classified by function.

1.2.2. Search assistance

The table of contents makes it easier to find information.

1.3. Order the instructions

You can order the user manual by sending a request to:

AGRISEM INTERNATIONAL SA

535 Rue Pierre Levasseur

CS 60263

44158 ANCENIS - France

Such. : 02.51.14.14.40 – Fax: 02.40.96.32.36

1.4. Interpreting the version of the instructions

The version of the notice is indicated on the cover page and is composed as follows.

Description of the manual versioning

Example: NOTT-FR-705-A

Character	Description
NOTT	User manual
FR EN DE PL RU	French English German Polish Russian
705	Machine type
HAS	Version of the notice

1.5. Description of warning terms



HAZARD

This pictogram accompanies a situation that poses a risk to the user.

Consequences: death or serious injury are inevitable.



WARNING

This pictogram accompanies a situation that poses a risk to the user.

Consequences: death or serious injury may occur.



ATTENTION

This pictogram accompanies a situation that poses a risk to the user and the equipment.

Consequences: minor injuries may occur to the user, minor damage may occur to the equipment.



IMPORTANT

This pictogram provides mandatory information.

Consequences: material damage, physical risks, financial risks.



NOTE

This pictogram provides advice.

Consequences: more efficient use.



BARRIER CLOSED

Indicates that the waste should not be thrown in a regular bin but collected through a specific channel.

MOEBUS RIBBON



This is the universal recycling symbol. It indicates that the product or its packaging is technically recyclable, but not that it is recycled, nor that it will be.

The products will only be recycled under two conditions:
- the sorting process And recycling exists on your territory, - they were correctly sorted.

2. Machine presentation

2.1. Intended use of the equipment

AGRISEM INTERNATIONAL Turbomulch is exclusively designed for a useprofessional, in accordance with the rules recognized within the framework of agricultural work practice.

The mounted Turbomulch is designed and adapted to be attached to the hitch and traction system of a tractor in order to carry out soil work and the planting of seeds and/or fertilizers distributed by a front hopper, at a depth of 1 to 2 cm.

The Turbomulch should only be used, maintained and repaired by people with a perfect knowledge of the machine and informed of the potential risks.

Proper use requires strict adherence to the instructions in the user manual as well as the rules for use, maintenance and repair described by the manufacturer.

It is the responsibility of the user and the owner to comply with specific accident prevention instructions as well as general rules regarding safety, occupational medicine and road legislation.

Any use other than that defined above will be considered as non-compliant to the allocation and will release the manufacturer from any liability in case of damage; the user alone will bear the risks resulting from such use.

Skills and level of education

Activity	Educated person	Person who followed a training specialized	No one in particular trained in this activity
Loading transport	-	x	x
Commissioning	x	x	-
Installation and setup of equipment	-	x	-
Functioning	x	x	-
Interview	x	x	-
Troubleshooting and resolving faults and incidents	x	x	-
Waste recycling/disposal	-	-	x

2.2. Ge neral view of the machine

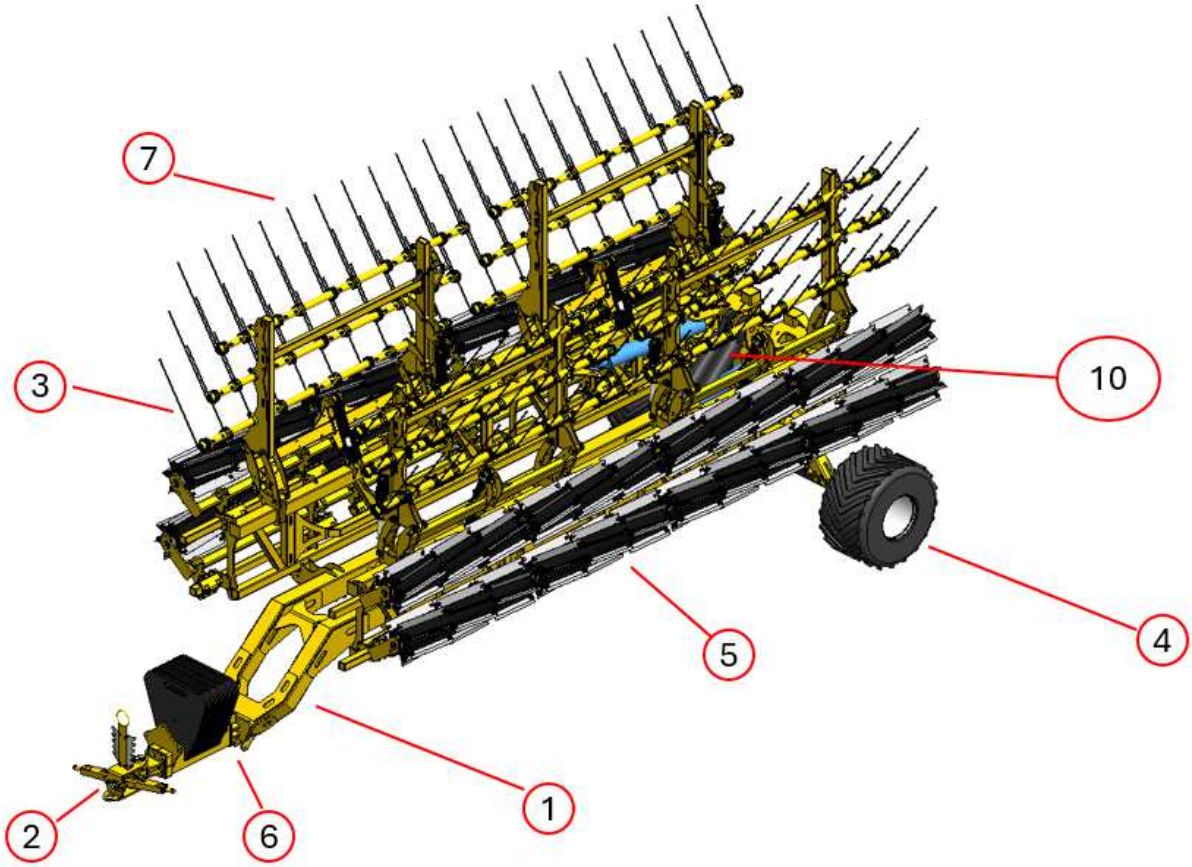

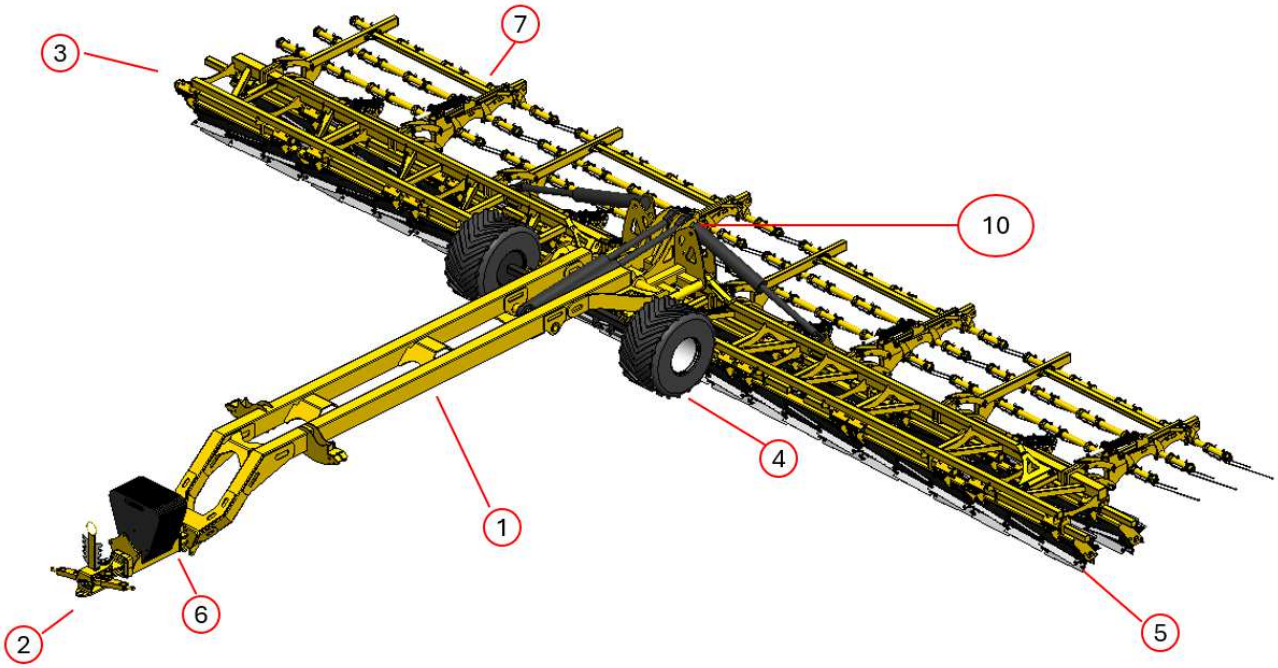

Landmark	Designation
1	Chassis
2	Coupling
3	Extension
4	Transport wheels
5	Roll
6	storage stand
7	harrow comb
8	Element support
9	Folding cylinder
10	Folding system
11	
12	
13	
14	
15	
16	
17	
18	

3. Identification

3.1. Validity of the user manual

This user manual is valid for the following machines.

Machine	Serial number	
	Of	HAS
Folding Trailed Turbomulch	26HC06EX001	-

IMPORTANT

This manual usage East published For a wide broadcast And there availability of the equipment The indicated combinations, whether on the base machine or as an accessory, may vary depending on the region where the machine is used. All combinations available at the time of publication of the user manual will be described therein.

3.2. Plate identification location And description

3.2.1. Machine carried

There plate identification located on the hitch.



Fig. 1

Landmark	Designation
1	Model
2	Working width
3	Serial or identification number
4	Year of manufacture
5	Empty weight of the equipment



The identification plate contains the following information.

Serial number description

The serial number consists of the following elements.

Landmark	Designation
1	Year of manufacture
2	TURBOMULCH
3	Features
4	Increment number

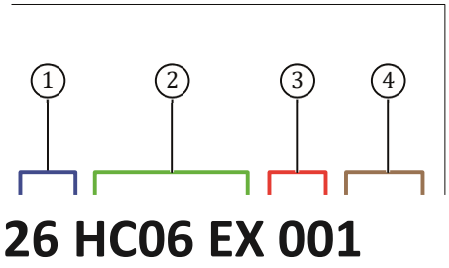

Fig. 3

4. Warranty

4.1. Warranty Conditions



NOTE

Return the warranty certificate within 15 days and attach a copy of the invoice (without return of these documents, the warranty procedure cannot be implemented).

The following are the warranty conditions that apply to machines exclusively equipped with original AGRISEM INTERNATIONAL parts.

By selling new products to its dealers, the manufacturer provides a warranty that, subject to certain conditions, the goods are free from defects in materials and workmanship. Purchasers of new AGRISEM INTERNATIONAL equipment should request all necessary information from the dealer who supplied the equipment.

As part of its policy of continuous product improvement, the manufacturer reserves the right to modify the characteristics of its equipment without prior notice and declines all responsibility in case of possible differences between the characteristics of its products and the description of the latter appearing in its publications.

4.1.1. Duration

If a defect is found on a structural part within 12 months of the machine's delivery date, and if this defect is due to a flaw in the raw material or a manufacturing error at the factory, the presumed defective parts must be returned to the Company's address for expert analysis.

AGRISEM INTERNATIONAL SA – 535 Rue Pierre Levasseur – CS 60263 – 44158 ANCENIS - France Tel.: +33 2 51 14 14 40 – Fax: +33 2 40 96 32 36

The following will serve as proof of the equipment delivery date:

- the date of the delivery note and the invoice to the buyer.
- The return of the warranty certificate within 15 days (with stamp and signature of the reseller and the buyer) following delivery of the equipment.

4.1.2. Machines and parts concerned

Regarding the warranty, the term "Machine" refers exclusively to machines and parts manufactured by AGRISEM INTERNATIONAL. (It does not include external components such as tires, hydraulic hoses, etc., although these parts are also supplied by the company.)



NOTE

There guaranteeis cancelled if modifications have been made to the machine without the formal agreement of AGRISEM INTERNATIONAL or if parts other than those manufactured by the company have been fitted (for example: counterfeit wear parts).

4.1.3. Scope of the warranty

The warranty is limited to the reimbursement or repair of parts that have been recognized as defective in material or machining, in our factories and by our Technical Services.

The costs associated with dismantling and replacing the defective part are not covered by the warranty. Nor are the costs of transporting the machines or machine parts to the repair location, or returning them, covered.

Wear parts are not covered by the warranty.

4.1.4. Prerequisites

The maintenance and use of the machine must comply with the instructions in the user manual.

All safety measures mentioned in this user manual and in those of the supplementary equipment must be observed.

All protective and safety components must be regularly inspected and replaced as needed, including: cylinders, hydraulic hoses, safety springs, and turbine. Refer to the "Instruction" chapters of"security" and Maintenance".

The guarantee is only applicable if the customer has fulfilled the general obligations of the contract, and in particular the payment terms.

4.1.5. Pre-delivery checks

Upon delivery of a machine, the dealer is required to perform certain operations. These include, of aOn the one hand, a complete pre-delivery inspection is carried out to ensure that the machine supplied is ready for immediate use, and on the other hand, the buyer receives comprehensive instruction on the basic principles of operating and maintaining the machine. This instruction covers instruments and controls, routine maintenance, and safety procedures. All those involved in the use and maintenance of the machine must be present during this instruction.

4.1.6. Warranty Exclusion

The warranty will not apply:

- If the defects are due to normal wear and tear, misuse, lack of maintenance, lack of supervision, or negligence.
- If the machine is damaged or defective due to use of the machine outside the scope of the applications specified by AGRISEM INTERNATIONAL.
- In case of improper use of the machine, please refer to the chapter "Intended Use of Equipment".
- In casefailure to comply with the instructions and regulations issued by THEmanufacturer and featured in this manual, particularly with regard to: safety, assembly, commissioning, use, operation and maintenance.
- In case of mishandling by the user.
- Causes due to the passage of foreign bodies.
- In case of damage resulting from a combination of the machine with other machines or instruments without the prior written consent of AGRISEM INTERNATIONAL, and/or without complying with the instructions of the manufacturers of the tractor and other instruments or machines.
- In case of use of the machine with improperly installed or non-operational protection and safety devices.
- If any modifications have been made to the machine without the prior written consent of AGRISEM INTERNATIONAL, or if spare parts, accessories or equipment have been fitted to the machine that are not original or have not been recommended by AGRISEM INTERNATIONAL.
- In case of non-compliant repair.
- In the event of damage during transport or handling by any carrier, it will be the recipient's responsibility to pursue the necessary claims against the carrier.

- The warranty does not cover the damaging consequences of the instrument being immobilized due to a defect or incident in the machine.
- The guarantee does not cover bodily injury to the owner or a third party, nor indirect consequences resulting therefrom.

Furthermore, AGRISEM INTERNATIONAL cannot be held liable for any compensation whatsoever in the event of crop loss or any damage due to a defect, hidden flaw or breakdown of the machine.

The buyer is always responsible for choosing the product and ensuring the machine is suitable for the desired result. They are responsible for using it correctly, in accordance with best practices and regulations.

Under no circumstances does AGRISEM INTERNATIONAL have any obligation regarding the outcome. final.

4.1.7. Limitations of application and liability

The guarantee cannot be assigned or transferred to any person without the prior written consent of AGRISEM INTERNATIONAL.

The resellers of our machines have in no way the right or the power to make any decision, whether express or tacit, on behalf of the company.

Technical assistance provided by the company or its agents for the repair or operation of equipment does not entail any liability on its part and shall not, under any circumstances, constitute a novation or derogation from the conditions of this warranty.

4.1.8. Guarantee Implementation Procedure

MUST BE STRICTLY OBSERVED BY BOTH THE DISTRIBUTOR AND THE BUYER

The implementation of the warranty is subject to strict compliance by the reseller and the user with the following provisions:

1 – Return by the reseller of the warranty certificate duly completed and signed by the reseller and the buyer.

2 - The claim must be submitted on a "WARRANTY CLAIM FORM" (see appendix) from AGRISEM INTERNATIONAL and sent by registered mail with return receipt requested (LRAR) by the reseller to the company's technical department within 10 days of the incident. This form must be legibly completed by the reseller and must include the following information:

- name and address of the reseller, code number,
- name and address of the buyer,
- machine type,
- working width,
- machine serial number,
- delivery date to the buyer,
- date of the breakdown,
- precise references of the replaced parts, invoice number and date,
- Make and model of the tractor used
- Detailed description and suspected causes of the incident.
- surface treated with the Disc-O-Mulch
- usable agricultural area of the farm,
- soil type, percentage of clay

- proof of invoice for wear parts,
- pebbles (yes/no),
- Parts replaced (yes/no) (send a photocopy of the invoice).

3 – The items deemed defective must be returned by the dealer to the company's address for expert assessment, accompanied by a copy of the warranty claim form provided for this purpose. The reseller must order the defective part from the spare parts department. The shipping costs for returning said part are the responsibility of the sender.

4 – The final decision regarding coverage under the warranty rests with the company's technical or general management. This decision, whatever whatever the subject of the warranty claim, is final and irrevocable and the buyer undertakes to accept this decision both with regard to the defect and the replacement of the part(s).

The company's sales representatives are in no way authorized to make such a decision, which would be invalid.



NOTE

If refused, the item will remain available to the customer for eight days; after this period, it will be discarded without recourse.

Machine dealers have no right or authority what so ever to make any decision, whether express or implied, on behalf of there Company.

4.1.9. Warranty claim on my.agrisem.com

To make a warranty claim on my.agrisem.com, please refer to the following videos:

- in French : https://www.youtube.com/watch?v=2TfUJqncDcM&list=PLaA-k1dqjgpE&index=2
- in English :https://youtu.be/RSHeNIsiAJA

4.1.10. Warranty Extension

If you choose to purchase the extended warranty, please refer to this contract for the terms and conditions of implementation of this extended warranty.

4.2. Exclusion of Liability Clause

AGRISEM INTERNATIONAL declines all responsibility for damages (and all consequences) indirectrelated) resulting from a Orseveral of the following causes.

- Improper use of the machine.
- Failure to comply with instructions dictated by the manufacturer and included in this manual, particularly with regard to: safety, assembly, commissioning, use, operation and maintenance.
- Improper assembly, commissioning, use and maintenance of the machine.
- Use of the machine with defective or improperly installed or non-operational protective and safety devices.
- Combining the machine with other instruments or machines without the written agreement of AGRISEM INTERNATIONAL, and/or without complying with the instructions of the manufacturers of the tractor and other instruments or machines.
- Modification made to the machine without the agreement writingfrom AGRISEM INTERNATIONAL.
- Fitting spare parts, accessories or equipment onto the machine that are not original or that have not been recommended by AGRISEM INTERNATIONAL.
- Failure to monitor the machine's wear parts.

- Use of the machine outside the scope of applications specified by the manufacturer.
- Non-compliant repair and maintenance.
- Catastrophes resulting from the action of foreign bodies, fortuitous events and force majeure.

Furthermore, AGRISEM INTERNATIONAL cannot be held liable for personal injury to the owner or any third party, nor for any indirect consequences resulting therefrom, whether or not they are a direct consequence of a defect. It is also reminded that a safety radius of 50 meters must be observed.

Any claim for compensation for damage that did not occur directly to the machine is excluded.

AGRISEM INTERNATIONAL shall not be held liable for damages resulting from misconduct or improper use.

AGRISEM INTERNATIONAL shall not be held liable for obtaining compensation for the damaging consequences of immobilization of the instrument due to a defect or incident of the machine.

5. Safety instructions

5.1. Safety instructions

5.1.1. Introduction

This user manual must be read and understood before first use.

This user manual East published for wide distribution and the availability the equipment indicated, that whether on the base machine or as accessories, it may vary depending on the region where the machine is used.

Always consult the dealer/reseller if you do not understand any part of this manual. It is important that these instructions are understood and followed.

This chapter supplements the safety instructions that may appear in other chapters of this manual.

The machine is used in combination with an agricultural tractor; only careful reading of the operating manuals for both pieces of equipment (tractor + machine/tool) will ensure safe operation for property and people.

Most accidents that occur during work, maintenance, or while traveling are due to failure to observe the most basic safety rules. Therefore, it is crucial that anyone likely to work with this machine strictly adheres to the fundamental rules below, as well as the safety instructions indicated on the stickers affixed to the machine.

This machine was designed for precise work; it must always be in perfect working order. Functioning and must be repaired only with genuine AGRISEM INTERNATIONAL parts.

This machine should only be used, maintained and repaired by competent persons familiar with its characteristics, its modes of use and informed of the safety rules for the prevention of accidents and the dangers to which they may be exposed.

This machine must be exclusivelyused in accordance with its intended purpose and in a state not presenting none Safety risk. Malfunctions that could compromise safety should be addressed immediately.

The user is required to strictly adhere to the safety instructions contained in this manual and the stickers affixed to the machine. For clarity, some of the illustrations in this manual have omitted safety signs and indicators. Never use the machine if these elements are not present in place. If some of these elements have been removed to carry out a repair, to put backmust be in place before use.

He is also required to comply with the regulations in force concerning: accident prevention, occupational safety (labor code), occupational medicine, road legislation, and waste reprocessing.

Before using the machine for the first time, carefully read all the safety instructions contained in this user manual and familiarize yourself with the control components.

The machine should never be entrusted to a person not trained in its use.

Responsibility and guarantee

In addition to the other cases covered in this manual, the manufacturer declines all responsibility for damages (personal injury or property damage) resulting from one or more of the following causes:

- Failure to comply with the manufacturer's instructions contained in this manual, particularly with regard to: safety, assembly, commissioning, use, operation and maintenance.
- Improper use of the machine.
- Improper assembly, commissioning, use and maintenance of the machine.
- Use of the machine with defective or improperly installed or non-operational protective and safety devices.
- Combining the machine with other instruments or machines without the written agreement of AGRISEM INTERNATIONAL and/or without complying with the instructions of the manufacturers of the tractor and other instruments or machines.

  List of compatible AGRISEM INTERNATIONAL machines

  • Combiplow: Disc-O-Mulch / Maximulch / Actimulch

- DSF: Disc-O-Mulch / Maximulch / Actimulch / BOSS / TURBOMULCH / VIBROSEM / STRIPCAT
- DSA: Disc-O-Mulch / Maximulch / Actimulch
- DS500/200: Disc-O-Mulch / Maximulch / Actimulch

- Modification made to the machine without agreement writingfrom AGRISEM INTERNATIONAL.
- Fitting non-original spare parts, accessories, or equipment to the machine, or equipment not recommended by AGRISEM INTERNATIONAL, is prohibited. Spare parts are available through the online spare parts catalog (accessible at http://parts.agrisem.com/) or from your authorized after-sales network.
- Failure to monitor the machine's wear parts.
- Use of the machine outside the scope of applications specified by the manufacturer.
- Non-compliant repair and maintenance.
- Catastrophes resulting from the action of foreign bodies, fortuitous events and force majeure.

Similarly, in addition to the other cases covered in this manual, any warranty claim relating to a Shameresulting from one or more of the causes listed above is excluded.

5.1.2. Instructions to be followed before using the machine

Wear perfectly fitting clothes. Clothes floating objects are likely to be caught by of the elements in motion.

Equip yourself with personal protective equipment (PPE) corresponding to the work planned (gloves, shoes, glasses, helmet, ear protectors…).

Be aware that soil cultivation equipment, even of small width, with very aggressive components (blades, shares, discs…), can cause significant bodily injury in the event of an accident.

Handle the controls carefully.

Before each use, check the area surrounding the machine; no person should be within a 50-meter radius of it. theremachine. Ensure sufficient visibility to guarantee this condition of use.

Before starting any work, ensure that the weight distribution on the tractor allows for a stable assembly. The tractor mustbe sufficiently weighted at the front to avoid the risk of wheelie; otherwise, add weights at the front of the tractor.

Check, Before each use, the tightening of the screw, nuts and bolts in accordance with the operation of Maintenance is described in this manual. Tighten if necessary.

During unfolding and folding maneuvers, no person should be within a perimeter of less than 50 meters around the machine.

Check that the machine is correctly attached.

Always install the pins and locking systems.

Check that the machine complies with safety regulations people.

Check, Before each use, that all safety and protection devices (devices of security,Emergency stop, wheel chock, fire extinguisher) are in place and operational. Immediately replace any worn or damaged protectors.

Keep away any person or animal that may be in the maneuvering or use area of there machine. A safety perimeter of 50 meters around the machine must be respected.

Perform a machine check in order toto detect any potential damage exteriors and control the condition of the protective devices. The protective devices must be clean, legible, and in good condition. Otherwise, contact customer service AGRISEM INTERNATIONAL in order to replace them.

Only persons authorized by the machine owner and who have been trained and instructed are permitted to work on and with the machine. The operator is responsible to third parties while working on and with the machine.

Do not use the machine on very rough or steeply sloping terrain.

Do not use the machine during thunderstorms and lightning.

The machine owner must:

- Give the user manual to the operator.
- Ensure that the operator has read and understood it.
- Ensure that the operator is familiar with the basic instructions relating to workplace safety and accident prevention.

In case of cuts or injuries resulting in contact with the products contained in the machine, disinfect immediately.

5.1.3. Requirements to be observed for coupling and uncoupling

Ensure proper compatibility of the tractor/machine hitch. Only combine compatible equipment (machine and tractor). If in doubt, contact the AGRISEM INTERNATIONAL after-sales network.

Check that the tractor has the required characteristics for hitching there machine (see "Features" page 91).



WARNING

If the tractor does not conform to the specifications of the attached machine, you may be liable for the following risks:

- Coupling failure
- Instability under load
- Instability during maneuvers
- Braking capacity insufficient

Check that the tractor meets the required specifications before proceeding with the installation or hitching of the machine.

The machine should only be carried by or attached to a tractor if the latter meets the required specifications.

Perform a braking test to verify that the tractor can provide the required deceleration power, even with the mounted/attached machine.

Refer primarily to the tractor's user manual; the references noted below are given for guidance only.

Data needed for the calculation

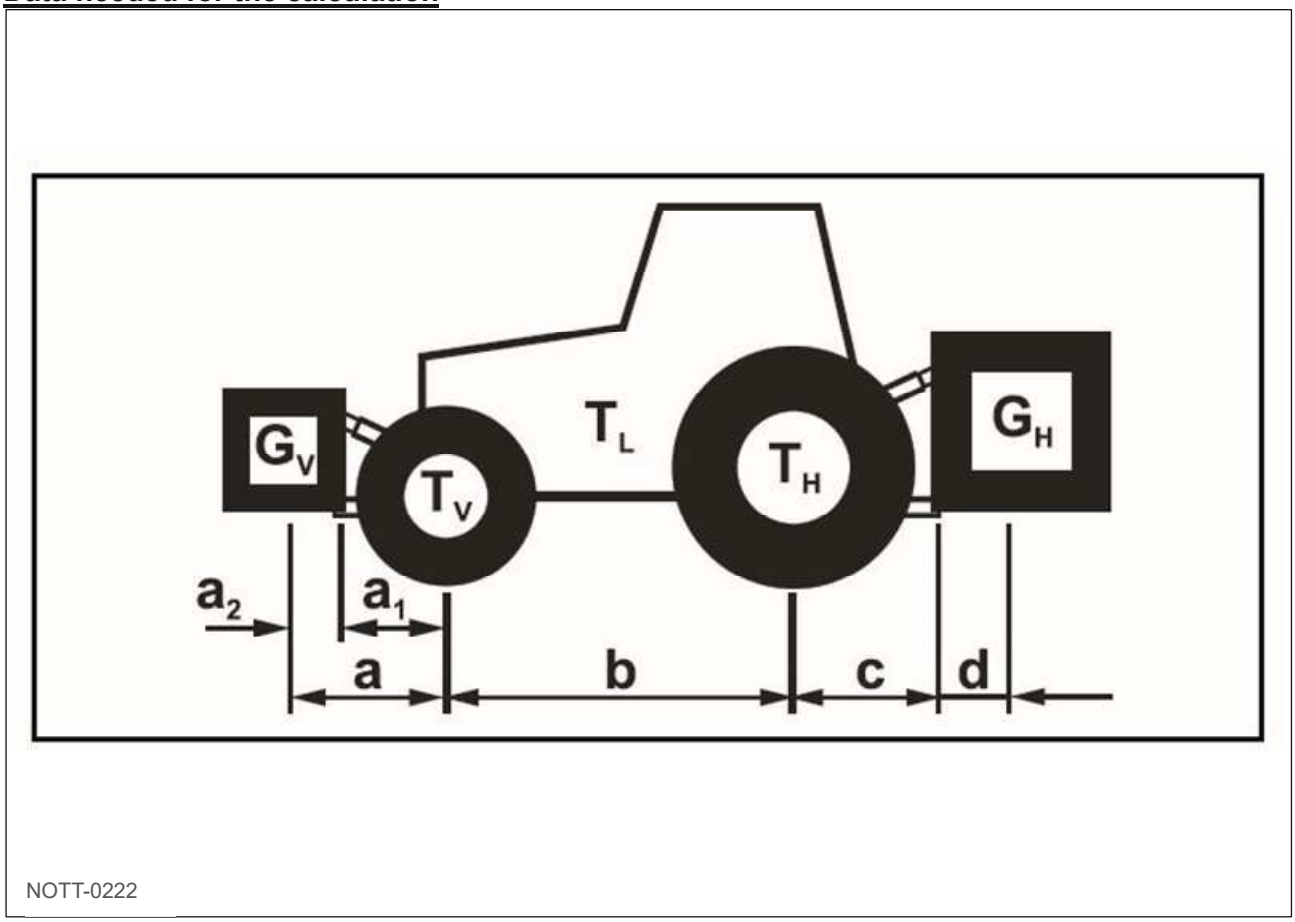

Fig. 4

Landmark	Unit	Designation	Comment
TL	[kg]	Tractor unladen weight	See the tractor's user manual or registration certificate.
TV	[kg]	Load on the front axle of the empty tractor	
TH	[kg]	Load on the rear axle of the empty tractor	
GH	[kg]	Total weight of machine mounted at the rear or rear ballast	See the technical specifications of the machine or the rear ballast
GV	[kg]	Total weight of machine mounted at the front or weight at the front	See the technical specifications of the front-mounted machine or the front ballast
has	[m]	Distance between the center of gravity of the front-mounted machine or front ballast and the center of the front axle (sum a1 + a2)	See the technical specifications of the tractor and the front-mounted machine or front ballast, or measure
a1	[m]	Distance between the center of the front axle and the center of the lower control arm hitch point	See the tractor's user manual, or measure

a2	[m]	Distance between the center of the lower arm hitch point and the center of gravity of the front-mounted machine or front ballast (center of gravity distance)	See the technical specifications of the front-mounted machine or front ballast, or measure
b	[m]	Tractor wheel base	See the tractor's user manual or registration certificate, or measure
Landmark	**Unit**	**Designation**	**Comment**
c	[m]	Distance between the center of the rear axle and the center of the lower control arm hitch point	See the tractor's user manual or registration certificate, or measure
d	[m]	Distance between the center of the lower arm hitch point and the center of gravity of the rear-mounted machine or rear ballast (deviation from the center of gravity)	See the machine's technical specifications

Calculation of the minimum ballast required at the front of the tractor to ensure maneuverability

Enter the value for the minimum ballast calculated GV min, required at the front of the tractor, in the table on page 21.

$$G_{V\ min} = \frac{G_H \bullet (c+d) - T_V \bullet b + 0{,}2 \bullet T_L \bullet b}{a+b}$$

NOTT-0223

Fig. 5

Calculation of the actual load on the front axle of the TV tractor

Enter in the table on page 21 the value for the actual calculated load on the front axle and the permissible load on the front axle indicated in the tractor's operating instructions.

$$T_{V\ tat} = \frac{G_V \bullet (a+b) + T_V \bullet b - F_H \bullet c}{b}$$

NOTT-0224

Fig. 6

Calculation of the actual total weight of the tractor and machine combination

Enter in the table on page 21 the value for the actual total weight calculated and the total authorized weight indicated in the tractor's operating instructions.

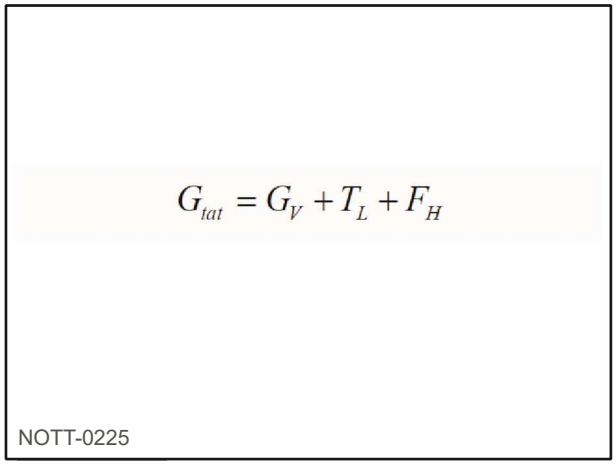

Fig. 7

Calculation of the actual load on the rear axle of the TH tractor

Enter in the table on page 21 the value for the actual calculated load on the rear axle and the permissible load on the rear axle indicated in the tractor's operating instructions.

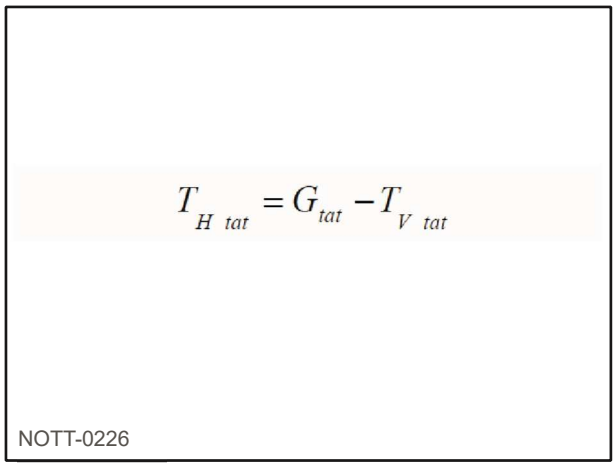

Fig. 8

Tire load capacity

Enter in the table on page 23 twice the value (two tires) of permissible load capacity of the tires (see e.g. the tire manufacturer's documents).

Painting

	Actual value obtained by calculation	Permitted value according to the user manual tractor		Double the permissible load capacity of the tires (2 tires)
Minimum ballast before / back	/ kg	--		--
	kg	kg	≤	-- ≤

Total weight	kg	≤	kg	kg
Front axle load			kg	
Charge on axle back	kg	≤		kg
		≤		
		≤		

NOTE

Take from the tractor's registration certificate the authorized values concerning the total weight, the loads per axle and the load capacities of the tires.

The values real calculated must be lower Or equal (≤) to values authorized.

WARNING

Dangers of accidents involving crushing, cutting, entanglement, pinching and impact related to stability insufficient below charge thus than a maneuverability And a power of braking insufficient of tractor.

It is forbidden to attach the machine to a tractor that was used as the basis for the calculation:

- even if a calculated actual value is higher than the allowed value.
- if the tractor is not equipped with front ballast (if necessary) corresponding to the minimum ballast required at the front (GV min).

Add ballast to the tractor with a front or rear ballast when the tractor's axle load is exceeded on only one axle.

Special cases

If the minimum ballast required at the front (GV min) is not obtained with the weight of the front-mounted machine (GV), use additional weights in addition to the front-mounted machine.

If the minimum ballast required at the rear (GH min) is not obtained with the weight of the rear-mounted machine (GH), use additional weights in addition to the rear-mounted machine.

Tractor/machine immobilization

WARNING

Dangers of accidents due to crushing, shearing, cutting, tearing, snagging, entanglement, pinching and impact during interventions on the machine in the following cases:

- accidental lowering of the un-immobilized machine, raised via the hydraulic circuit of the tractor's three-point hitch.
- accidental lowering of raised and unsecured parts of the machine.
- accidental starting and movement of the tractor and machine assembly.

Before any work is carried out on the machine, take all necessary measures to prevent accidental starting and movement of the tractor and machine assembly.

Interventions on the machine, for example assembly, adjustment, troubleshooting, maintenance and repair, are prohibited:

- if the machine is driven,
- as long as the tractor engine with coupled drive shaft/hydraulic circuit is running,
- when the ignition key has not been removed and the tractor engine with coupled drive shaft/hydraulic circuit can be accidentally started,

- when the tractor and machine are not immobilized with their respective parking brakes and/or wheel chocks,
- when moving parts are not blocked to prevent accidental movement.

These interventions in particular present a risk of contact with unimmobilized components.

Lower the machine / the machine parts raised and not blocked / immobilized.

Here's how to avoid any accidental lowering:

1 - Turn off the tractor engine,

2 - Remove the ignition key,

3 - Engage the tractor's parking brake.

4 - Immobilize the machine (only for the attached machine):

- on a flat surface using the parking brake (if applicable) or wheel chocks,
- on rough or sloping terrain using the parking brake and wheel chocks.

The requirements for the tractor include:

- the total permissible weight (including ballast devices),
- the permitted axle loads,
- the permissible support load at the tractor coupling point,
- the permissible load capacities of the mounted tires,
- a sufficient permissible coupling load,
- power take-off sleeves (6/21 splines),
- the compatibility of coupling devices,
- the load capacities of the tires.

This information can be found on the vehicle's identification plate or registration certificate and in the owner's manual.of tractor. If they are absent se bring closer of networkafter-sales service of tractor in order to of power confirm these information.

The tractor's front axle must always support at least 20% of the tractor's unladen weight. For more details, refer to the tractor's operating instructions.

Calculation of the actual values of the tractor's total weight, axle load, tire load capacity, and minimum ballast required

The maximum authorized weight of the tractor indicated on the vehicle registration document must be greater than the sum of:

- the empty weight of the tractor,
- of the east
- of the total weight of the machine being carried or the support load of the attached machine.

This instruction applies only to Germany:

In the event of non-compliance with axle loads and/or the total permissible weight after exhaustion of all possibilities, the competent authority according to the law of the Land may issue, on the basis of the report of an approved expert in the field of motor vehicle traffic and with the agreement of the manufacturer, a derogation in accordance with Article 70 of the German Road Traffic Act, as well as the compulsory authorization under the German Road Traffic Act.

Machine combination: do not combine machines that are incompatible with each other or whose combination is incompatible with the tractor.

List of compatible AGRISEM INTERNATIONAL machines

- Combiplow: Disc-O-Mulch / Maximulch / Actimulch
- DSF: Disc-O-Mulch / Maximulch / Actimulch

- DSA: Disc-O-Mulch / Maximulch / Actimulch
- DS500/200: Disc-O-Mulch / Maximulch / Actimulch

AGRISEM INTERNATIONAL declines all responsibility for any damage resulting from a combination of machines that has not been authorized in writing by AGRISEM INTERNATIONAL.

Dangers of accidents related to component breakage during operation, resulting from unauthorized combinations of coupling devices.

Coupling and uncoupling are operations that present risks of personal injury.

Before hitching or unhitching

- Place the machine on a stable surface.
- Lower the pressure in all hydraulically controlled circuits.
- Before getting off the tractor, take all necessary precautions to avoid accidental movement of the tractor.
- Secure the machine and take all necessary measures to prevent accidental movement of the machine.

The machine must only be attached to the designated coupling points and in accordance with the applicable rules.

5.1.4. Instructions to be observed when using the machine



WARNING

Risks of accidents by crushing, cutting, entanglement, pinching and impact related to a safety defect concerning movement or operation.

Before any commissioning, check that the machine and tractor are able to move and operate safely.

Never climb on or stand on the machine while it is in motion.

Never work in reverse.

Do not allow children to climb on the tractor or machine, or play near the equipment, even when the machine is stopped.

During any use or operation of the machine, keep all persons away from the area of operation. A safety perimeter of 50 meters around the machine must be maintained.

Machine components controlled by an external force contain areas subject to crushing and shearing. Keep away from these hazardous areas.

Be aware of hidden obstacles (stones, roots, pipes, cables, etc.). In the event of a collision with an obstacle, it is imperative to stop the drive, shut off the tractor engine, remove the ignition key, and wait for the machine to come to a complete stop. Some parts may have inertia; wait 5 minutes after switching off the ignition before working on the machine. Before resuming work, inspect the machine for any damage.

If the obstruction is an electrical cable or a gas pipe, alert the relevant authorities.

When using the machine, stones or foreign objects may be ejected a considerable distance. A safety perimeter of 50 meters around the machine must be maintained. Keep any person or animal that may be in the machine's danger zone away from the machine.

Do not park in the machine's working area or in the machine's rotation and pivoting area.

During each use of the machine, regularly perform visual inspections to detect any external damage and ensure that the safety and protective devices are functioning correctly. Also, regularly check the various settings. The protective devices must be clean, legible, and in good condition.

Do not use the machine on very rough or steeply sloping terrain.

Do not use the machine during thunderstorms and lightning.

In terms of driving

Adapt driving in order to be able to control the tractor in all circumstances with the mounted or attached machine.

In this regard, take into account personal abilities, conditions relating to the state of the ground or road, traffic, visibility and weather conditions, the driving characteristics of the tractor as well as the conditions of use when the machine is carried or hitched.

Ensure compliance with the rules of caution and safety dictated by each situation in relation to the regulations in force.

Speed and driving style should always be adapted to the terrain, roads and paths.

Reduce your speed when driving on rough terrain or in tight turns.

When turning, take into account the overhang and the inertia mass of the tool being carried.

In all circumstances, avoid sudden changes of direction.

Do not leave the driver's seat until the equipment is completely stopped, the engine is off, and the parking brake is engaged.

Do not transport any person or animals on the machine and auxiliary tools during operation or transport.

In case of travel on public roads

Respect the traffic laws in force in the country.

Before any outing on public roads, check the road dimensions of the machine, remove any oversized parts.

Take into account the permissible widths for transport and take into account the transport height according to the machine attached, in accordance with the legislation in force.

Take into account a higher center of gravity with a vertical folding machine, the overall stability will therefore be different between the unfolded and folded positions, adapt the driving accordingly.

Before setting out on the road, ensure that the attached instrument is equipped with lighting and signaling devices that comply with the highway code, and with any other device required by current regulations.

Since the AGRISEM INTERNATIONAL rear signage can be removed during work, check that this signage has been correctly reinstalled before any road travel.

Check that this equipment is functioning properly and is clean. Replace any missing or damaged equipment before traveling on the road.

The user must not consume alcohol, medication, or any products that impair their perception, leading to a loss of alertness or coordination. A user taking medication, whether prescribed or not, must seek medical advice regarding their ability to operate machinery safely.

Before traveling on the road, secure all pivoting parts of the machine in the transport position to prevent dangerous changes in position. Also check that all screws, nuts, and bolts are tight and that all machine parts are properly secured and cannot be moved or detached.

If the machine is a folding machine, the locking system must be engaged.

Follow the instructions regarding the transition of the machine to the transport position contained in the manual.

Also check, if applicable:

- the connection of the supply pipes,
- the braking system and the hydraulic circuit.

Ensure that no movement can be made involuntarily.

If the equipment is not originally equipped with warning devices, provide additional signaling equipment: lighting bars, reflectors, reflective plates or adhesive strips. These devices must be clean, legible, and in good condition. Otherwise, contact AGRISEM INTERNATIONAL's after-sales service for replacement.

Ensure that the machine or additional equipment does not obscure the tractor lights.

Ensure that the tractor's tire pressure is correct and appropriate for the situation.

Never drive while loaded at a speed exceeding 25 km/h.

Before heading out on the road, clean the machine of accumulated dirt.

After using a public road, be sure to clean the roadway and remove the mud left by the tractor and tools.

When travelling on public roads, the driver/owner is solely responsible. Always respect the rules and regulations in force.

5.1.5. Instructions to be followed during any intervention on the machine

These regulations relate in particular to cleaning, maintenance and repair work.

Follow the machine maintenance instructions contained in this user manual.

Before any intervention on the machine

Before any intervention on the machine, ensure that it cannot be accidentally started.

- It is essential to ensure that the machine is placed on a stable surface.
- Stop the tractor engine, remove the ignition key, wait for all moving parts to come to a complete stop and engage the handbrake.
- Place the machine on the ground, depressurize the hydraulic circuit and allow the machine to cool down.
- Secure the machine or its components that are in the raised position to prevent accidental lowering.
- Secure the machine.

When using a high-pressure cleaner or a steam cleaner, the following points must be strictly observed:

- Do not clean electrical and hydraulic components.
- Never direct the jet from the nozzle of the high-pressure cleaner or steam cleaner directly towards the lubrication points and bearings.
- Always maintain a distance between the nozzle and the machine.
- Follow the rules regarding the use of high-pressure cleaners.

Wear the personal protective equipment appropriate for the work to be performed. In particular, to carrysafety shoes and gloves for handling sharp parts.

Take all necessary precautions when adapting working parts that are both heavy and sharp.

The machine should only be maintained and repaired by competent persons familiar with the characteristics and operation of the machine.

The machine must only be repaired with genuine AGRISEM INTERNATIONAL parts.

To protect bare metal parts, use either a rust inhibitor that leaves a greasy film, or thick grease.

Depending on the type of machine: before any work on the electrical circuit or before any welding operation, disconnect the electrical harnesses coming from the tractor. Disconnect the battery and alternator cables.

Do not weld or use a blowtorch near pressurized fluids or flammable products.

5.1.6. Installation requirements

The machine may be equipped with electronic components and elements whose operation can be affected by electromagnetic emissions from other devices. This type of influence can pose a danger to people if the following safety instructions are not followed.

- In the event of retrofitting electrical devices and/or components onto the machine, with connection to the on-board electrical circuit, the user must first verify that the installation does not cause interference with the vehicle's electronics or other components.
- Ensure that the electrical and electronic components installed afterward comply with Directive 2004/108/EEC on electromagnetic compatibility in its current version and that they bear the CE marking.

Before any work on the electrical installation, disconnect the negative terminal of the battery.

Use only the recommended fuses. Using fuses of an inappropriate amperage can damage the electrical installation and create a risk of fire.

Always follow the safety rules for working on a battery-powered machine. For more details, consult the user manual for the machine in question.

5.1.7. Requirements relating to the hydraulic system

If your machine is equipped with a hydraulic circuit, follow these instructions.

The machine is powered by pressurized hydraulic energy; working on a pressurized circuit can lead to injury from contamination. All work must be carried out by professionals trained in the operation of hydraulic technologies.

For any replacement of hydraulic components, please contact the AGRISEM INTERNATIONAL after-sales service.

To avoid handling errors, mark the plugs and connectors of the hydraulic fittings between the tractor and the machine. Refer to the "Operation" chapter, page 37, for further details.

Before connecting a hose to the tractor's hydraulic circuit, ensure that the circuits, on both the tractor and machine sides, are perfectly clean and not under pressure.

Before any work on the hydraulic circuit, lower the machine, depressurize the circuit, switch off the tractor engine, engage the parking brake and remove the ignition key.

Before any intervention, allow the machine to cool down.

Regularly inspect hydraulic hoses. Damaged or worn hoses must be replaced immediately. Visually inspect flexible hydraulic hoses for any signs of tearing or abnormal wear.

When replacing hydraulic hoses, ensure that you only use hoses with the characteristics and quality specified by the machine manufacturer. If in doubt, consult the AGRISEM INTERNATIONAL after-sales network.

After each use of the machine, clean the ends of the quick-connect hydraulic fittings and replace the protective caps. Replace any fittings that do not lock properly or that leak.

Hydraulic hoses should never be left dragging on the ground.

If a leak is located, take all necessary precautions to avoid accidents. Never attempt to seal the leak with your hand or fingers.

Any pressurized liquid, especially hydraulic fluid, can puncture the skin and cause serious injury and infection.

In case of injury, consult a doctor immediately.

To prevent accidents caused by untimely hydraulic movements or by unauthorized persons, the distributors on the tractor must be blocked or locked when not in use or in transport position.

5.1.8. Braking system requirements

The braking system must undergo regular inspection and maintenance. Maintenance, repairs, and adjustments should only be carried out by qualified brake system specialists. Contact the AGRISEM INTERNATIONAL after-sales network.

Stop the tractor immediately if the braking system malfunctions and have it repaired.

Before any work on the braking system, place the machine on stable ground and secure it.

For machines equipped with brakes, after any adjustment or repair operation on the braking system, carry out a braking test in accordance with the procedure in the appendix.

5.1.9. Specific requirements for AGRISEM INTERNATIONAL seed drills

In addition to regulations applicable to all machines, the user of an AGRISEM INTERNATIONAL seed drill must comply with the following regulations.

Never climb onto the machine outside of the AGRISEM INTERNATIONAL walkway provided for this purpose.

Only get on the machine when it is stopped.

When working on the AGRISEM INTERNATIONAL seed drill or during flow rate tests, the seed drill must be parked within a 50 m radius. The hydraulic system must be depressurized (e.g., turbine stopped), the tractor's rear window must be closed, the tractor switched off, and the keys removed.

Ensure that no one remains on or near the seed drill during seed loading. The AGRISEM INTERNATIONAL walkway may only be used when the drill is parked.

Always ensure that the entire area corresponding to the seed drill's footprint is clear.

Respect the 50m safety perimeter:

- during the start-up of the turbine in order to avoid any shock related to projections (e.g. soil, oil, pebbles, metal...).
- during the use of the machine.

Improper handling of fertilizers and seeds treated with disinfectants can lead to poisoning and death. Follow the manufacturer's safety data sheet (SDS). If necessary, request the SDS or safety advice from the distributor. Determine the required personal protective equipment (PPE) according to the manufacturer's instructions and make it readily available.

For the front hopper, the user must comply with the road regulations of their country.

If the tractor's signaling is insufficient (or not visible enough), ensure that the front hopper is equipped with a lighting device and signal plates.

5.1.10. Requirements for machines equipped with safety systems with spring block

Many AGRISEM INTERNATIONAL tools feature safety devices with pre-compressed spring blocks. These can be very dangerous during technical work on the machine if all precautions are not taken.



ATTENTION

Any intervention on the entire "Spring Block" assembly must be preceded by written authorization from the company AGRISEM INTERNATIONAL.

5.1.11. Requirements relating to machines equipped with cardan shafts

When performing any work on cardan shafts, refer to the tractor manufacturer's instructions.

5.1.12. Requirements relating to loading and transport

Unless otherwise specified in a transport contract, all shipments must comply with the regulations in force in the territories crossed by the entire vehicle.

- For shipments under three tonnes: the carrier is responsible for carrying out the loading, securing, lashing and unloading operations of the shipment from the moment of its collection until its delivery.
- For shipments exceeding 3 tonnes: the loading, securing, and lashing operations, on the one hand, and the unloading operations, on the other, are the responsibility of the shipper or the consignee, respectively. Liability for any material damage occurring during these operations rests with the party performing them.

Therefore, unless a specific transport contract exists and for shipments exceeding 3 tonnes, the Buyer is responsible for unloading the machine.

Similarly, if the Buyer resells the machine and has it delivered, as the shipper, he/she is responsible for carrying out the loading, securing and lashing operations of the shipment.

If you have any doubts about the unloading operations or the loading, securing and lashing of the machine, contact AGRISEM INTERNATIONAL.

The user must acknowledge receipt of the machine and official documents once the handover has been completed by the reseller.

To do this, log in to:https://my.agrisem.com and follow the instructions given on the website.

5.1.13. User workstation

The machine must be operated by only one person, from the tractor driver's seat. Before each use, check the area surrounding the machine; no one should be within 50 meters of the machine. Ensure sufficient visibility to guarantee this operating condition.

5.2. Safety symbols on the machine

HAZARD

You are solely responsible for safety. Correctly following safety instructions will not only protect you but also those around you. Before using the machine, carefully study the instructions in this manual as well as all safety and instruction decals affixed to the machine: consider them an integral part of your safety program. Also, review all standard workplace safety measures and, above all, remember:

Your safety depends on you. You can prevent accidents that result in serious injury or death.

IMPORTANT

These safety symbols must be present and legible on the machine. If they are missing or damaged, contact AGRISEM INTERNATIONAL.

Landmark	Reference	Symbol	Meaning
1	ETIQ01-505		***WARNING DANGER*** Stop the engine and remove the ignition key before any maintenance or repair work.
2	ETIQ01-601		***WARNING DANGER*** Stop the engine and remove the ignition key before any maintenance or repair work.
3	ETIQ01-603		***WARNING DANGER*** Read the instruction manual and safety advice before starting and take them into account during operation.

Landmark	Reference	Symbol	Meaning

4	ETIQ01-605		***RISK OF CRUSHING*** To avoid any risk of crushing, do not remain in the work area.
5	ETIQ01-607		***RISK OF CRUSHING*** To avoid any risk of being crushed, do not remain in the area between the tractor and the machine.
7	ETIQ01-627		***RISK OF CRUSHING*** Stay away from the equipment switching area.
8	ETIQ01-633		***RISK OF CRUSHING / CUTTING*** To avoid any crushing or cutting, stay away from the machine.
9	ETIQ01-641		***RISK OF INFECTION THROUGH BODY INJECTION*** Follow the instructions in the instruction manual for servicing or maintenance operations.

Landmark	Reference	Symbol	Meaning
10	ETIQ01-643		***RISK OF ELECTRIFICATION*** Risk of electrocution, keep away from power lines.
11	ETIQ01-651		***RISK OF FALLING*** Risk of falling, do not carry anyone on the machine.
12	ETIQ01-657		***RISK OF LOOSENCY*** Risk of loosening, regularly check the tightness of the components in accordance with the maintenance plan.
15	ETIQ01-639		***RISK OF EXPLOSION*** Pressure vessel, do not attempt any intervention.
16	ETIQ01-611		***WARNING DANGER*** Caution: Never exceed the maximum air pressure indicated in the instructions, otherwise the machine may be damaged.

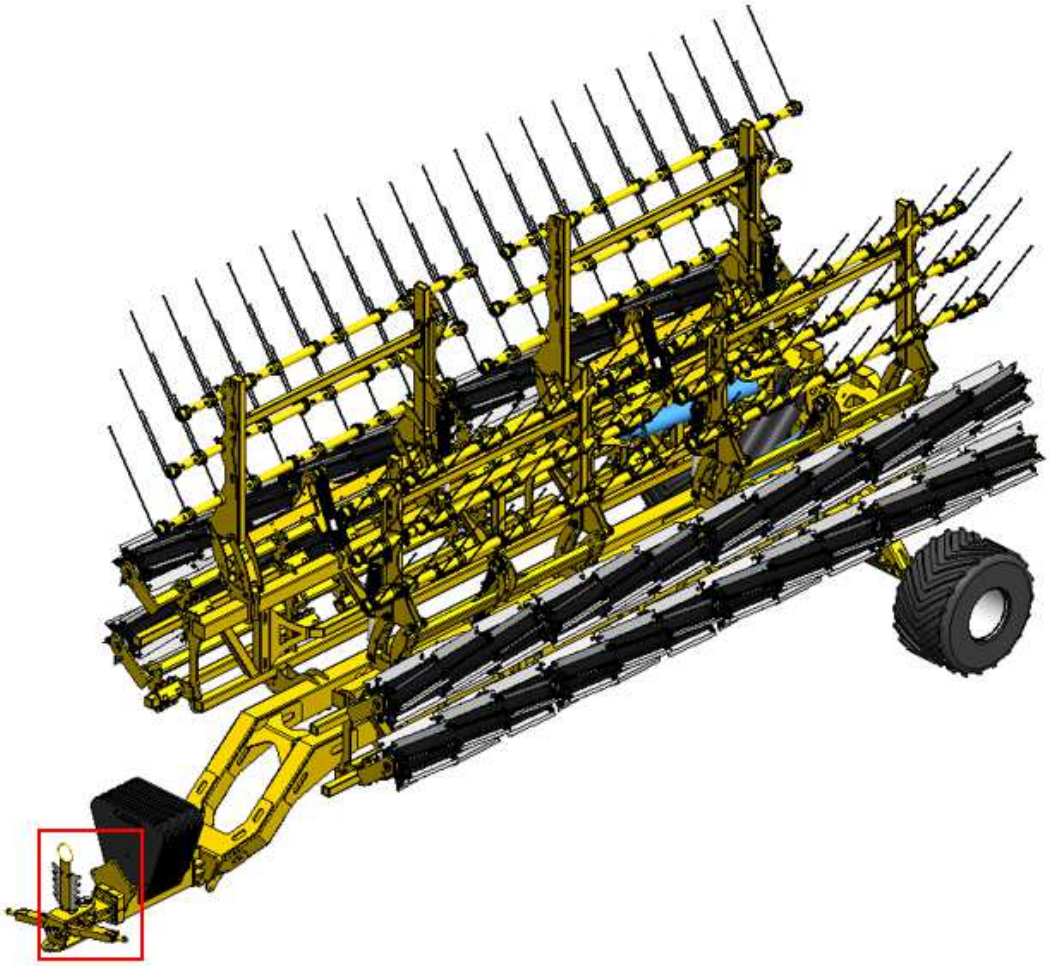

6. Usage

6.1. Location and description of commands

6.1.1. Coupling of towed machines

Landmark	Designation
1	Drawbar
2	Tow bar
3	Coupling bracket

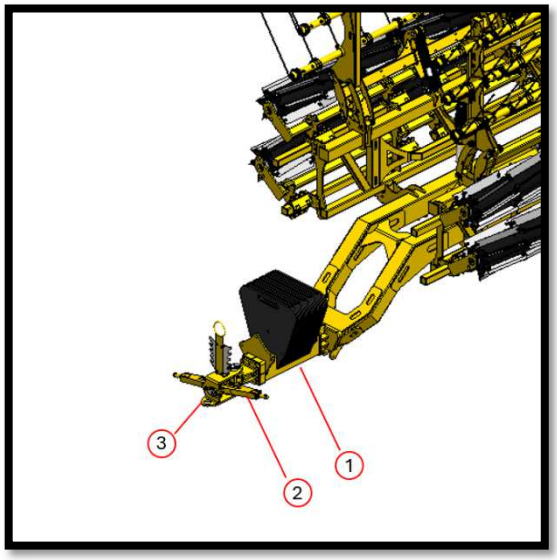

WARNING

Any pressurized liquid, especially hydraulic fluid, can puncture the skin and cause serious injury and infection.

6.1.2. Hydraulic connections

NOTE

The pictograms are common to the entire range of AGRISEM INTERNATIONAL machines; some functions may not be available for your machine.

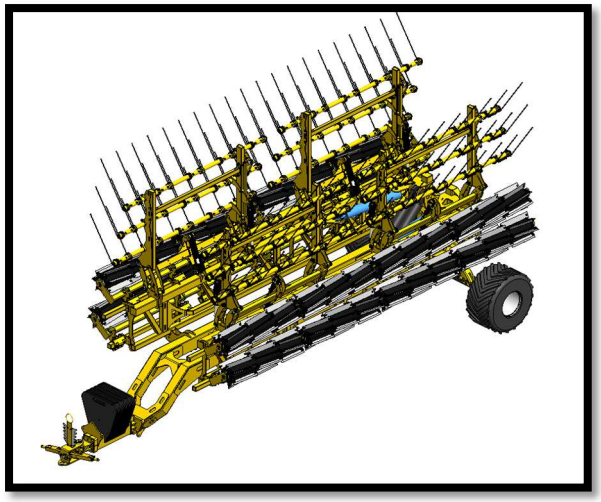

The functions controlled by each hydraulic line are identified using color codes on the hydraulic hoses and the pictograms shown below. The pictograms are located on the front of the coupling bracket.



Landmark	Designation	Flexible color coding
	Raise/Lower the axle	Green
	Fold / Unfold	Blue
	Free return of the folding cylinders	Red
	Comb depth adjustment	Black
	Adjusting the aggressiveness of the combs	Orange

6.1.3. Hydraulic control valves

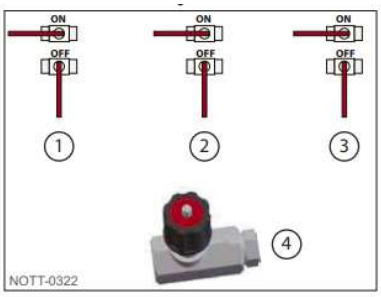

Turn clockwise to reduce the unfolding/folding speed.

Turn counterclockwise to increase the unfolding/folding speed.

Fig. 11

6.1.4. Lighting and signaling system

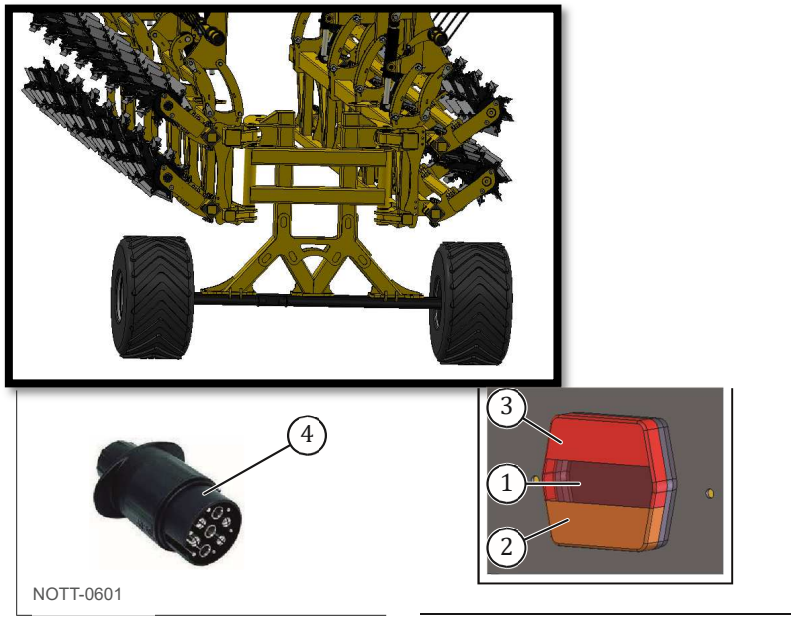

Fig. 12

Landmark	Designation	Features
1	Lighthouse	12V 55W
2	Flashing light	12V 21W
3	Brake light	12V 21W
4	Trailer socket	
5	Bands reflective	

WARNING

Lighting and signaling systems must be maintained in good condition and replaced if they are not.

6.2. Commissioning

6.2.1. Preamble

NOTE

Upon receiving the machine, verify that its specifications are correct. Then, perform all preliminary start-up operations as indicated in this manual.

6.2.2. Tractor/machine compatibility



NOTE

The information listed below is provided for informational purposes only and is in no way a substitute for assembly instructions; contact the after-sales network.



ATTENTION

Check there compatibility tractor/machine.

- Lifting back of a ability sufficient
- Distributer hydraulic double effect
- 7-pin 12V female socket for the signaling kit
- 3-pin 12V plug for the pneumatic compressor kit

6.3. Coupling/uncoupling



ATTENTION

Always perform coupling and uncoupling operations with caution and flexibility, no sudden movements.



ATTENTION

Before carrying out coupling and uncoupling operations, it is imperative to refer to the safety instructions.



ATTENTION

During the coupling or uncoupling operation, no person should be within 50 m of the machine.

Before proceeding with the coupling or uncoupling of the machine, it is important to ensure that the following elements are in place.

- The machine is on stable ground and no person is present within a 50m radius.
- The tractor's axle stands are set to the same length.
- Tires oftractors are inflated hasthe same pressure.
- The tractor is adapted to the machine to which it will be attached and is weighted accordingly (see "Characteristics", page 64).
- The tractor has the connections (hydraulic, mechanical and electrical) adapted to the machine that will be attached.

6.3.1. Required tractor characteristics



ATTENTION

Check that the tractor satisfied to requirements required before the hitch of there machine :

- Maximum permissible weight
- Permissible load capacities of tires
- The tractor's permissible axle loads

NOTE

The tractor's registration certificate/user manual provides information on the permitted values concerning the total weight, axle loads and tire load capacities.

ATTENTION

The available height for transport must be taken into account, particularly for passing under bridges and low power lines.

ATTENTION

The hitch of tiller on of the machines has base scope must be do on the drillings of high of the lower brackets. This helps to maintain greater stability of the machine during operation.

6.3.2. Coupling a towed machine

1 -Ensure that the machine is on a stable surface.

2 - Approach the tractor up to the machine's hitch.

3 - Attach the machine to the coupling ring or to the tractor's hitch arms depending on the type of drawbar attachment.

4 - Connect the hydraulic and pneumatic hoses (if the machine is equipped with them) according to the color markings. If using a tow hitch, connect the hydraulic lines first if necessary to adjust the drawbar height. - Fold the side extensions for transport.

5 - Connect the plug for the lighting device and check its operation.

6 - Remove the support stands (if the machine has them).

7 - Raise the machine with the tiller and the trailed or semi-mounted kit.

8 - Fold the side extensions for transport (see "Transport", page 103).

9 - For transport phases, lock the machine in transport position if it is foldable using hydraulically operated hooks or mechanical locks.

10 - Ensure that everything is properly connected and locked and that there are no foreign objects present on the machine.

11 - For transport phases, lock the machine in transport position if it is foldable using hydraulically operated hooks or mechanical locks.

12 - Ensure that everything is properly connected and locked and that there are no foreign objects present on the machine.

NOTE

Depending on the working conditions, the tractor push bar can be positioned in the fixed bore or in the bore with light.

For better ground monitoring, it is advisable to use drilling in daylight.

When using light drilling, always ensure that the hitch pin is in the middle of the light.

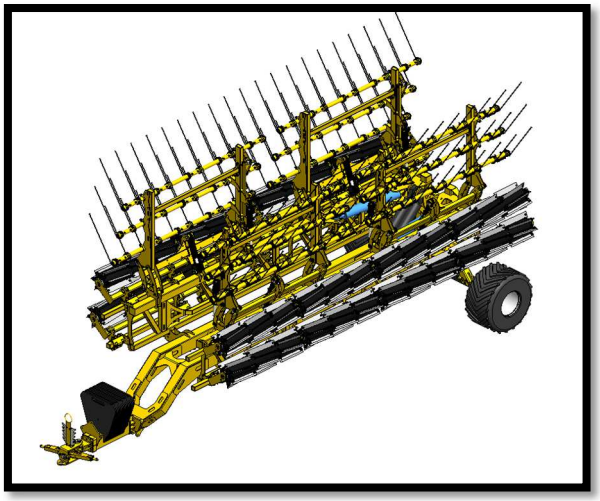

Fig. 13

6.3.3. Uncoupling a Tractor

1 - Ensure that the machine is unhitched on stable ground.

2 - Unlock the machine before unfolding.

3 - Unfold the machine if it is foldable.

4 - Put on the support legs (if the machine has them)

5 - Disconnect the hydraulic hoses if the machine is equipped with them.

6 – Unplug the reform for the devicelighting.

7 - Uncouple the machine.

6.4. Folding / Unfolding

6.4.1. General Information

WARNING

Before carrying out the coupling and uncoupling operations, it is IMPERATIVE to refer to the safety instructions.

WARNING

Before folding or unfolding, ensure that there are no foreign objects that could interfere with the operation.

WARNING

During the folding or unfolding operation, no person should be within 50 m of the machine.

6.4.2. Unfolding/folding the extensions

1- Initial position:

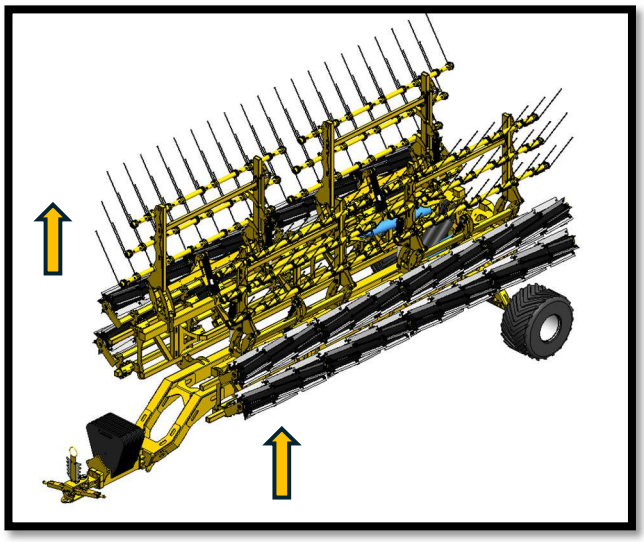

2- Operate the extension lifting/lowering cylinder distributor (2 large cylinders) to raise the extensions from the support by approximately 10cm

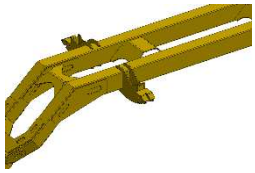

3- Operate the extension cylinder distributor until the extensions are fully deployed.

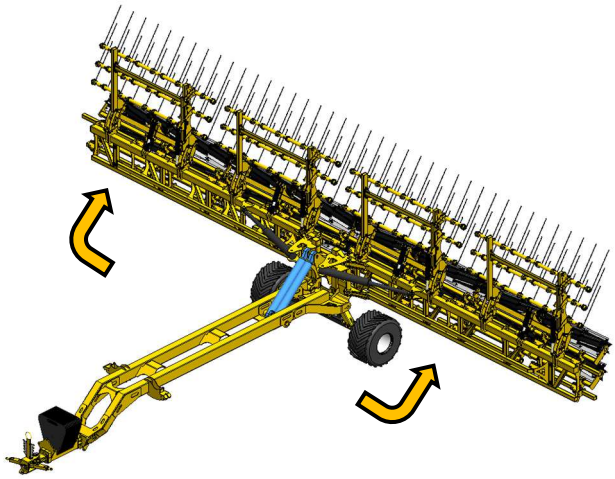

4- Reactivate the lift/lower cylinder distributor to complete the tool's working position.

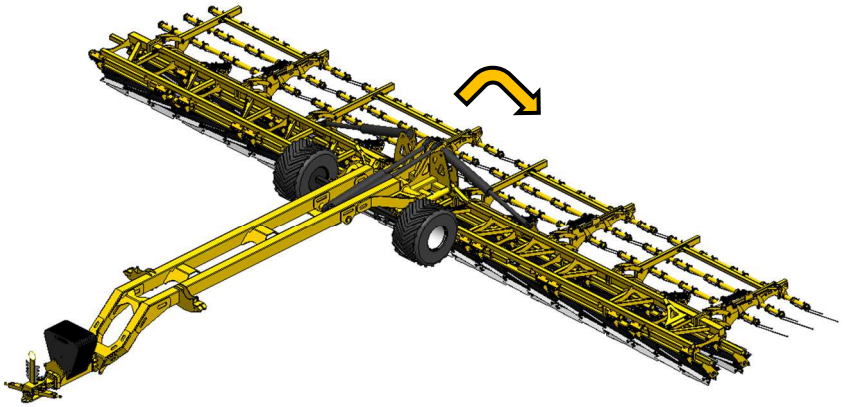

It is essential to follow the order described below to avoid damaging certain components of the Turbomuclh. Open the machine, if possible, on level ground. If this is not possible, orient the machine so that the drawbar and the tractor point uphill.

For folding, perform the opposite operation previously explained.

WARNING

Never enter the road network if the width of the machine in folded position exceeds 2.98 m.

WARNING

Never enter the road network if the extensions are not locked.

6.4.3. Blocking extensions

During transport on public roads and to prevent the machine from unfolding, a locking mechanism on the machine is mandatory.

Locking is ensured by a balancing valve and by parachute valves in case of hose rupture. ofjack.

6.5. Driving

When driving on the road, the machine must be converted into transport position:

- fold back the extensions,

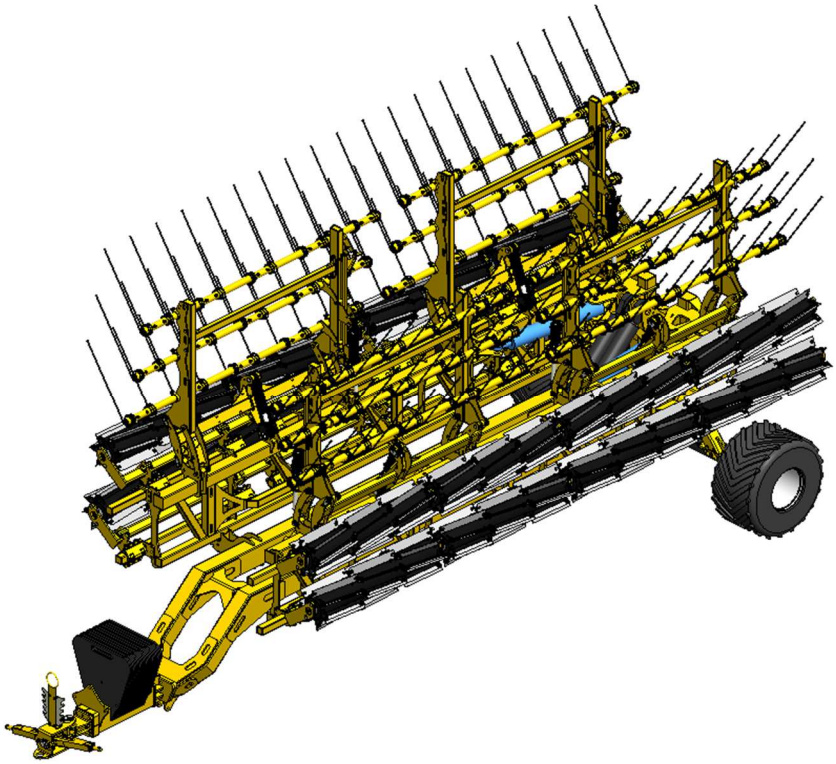

- secure the blocking of extensions.

Lift the machine completely to prevent the working parts from dragging on the ground. The speed of road transport must not exceed 25 km/h.

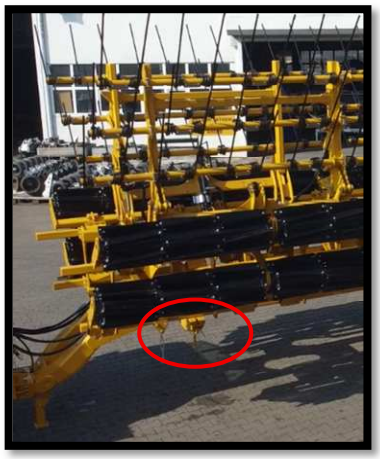

6.6. Adjusting the working depth

6.6.1. Adjusting the tooth inclination

The last two rows (1) are adjusted independently of the other rows. This allows for shallow tillage with the first rows (2-4 cm) and more aggressive tillage with the last two rows for destroying crop residues in summer, for example.

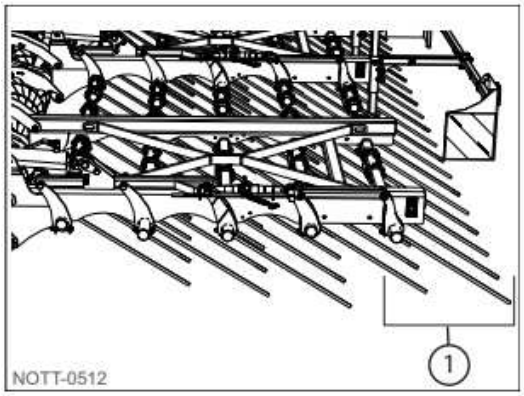

<u>Adjusting the first rows</u>

The first 3 rows of tines are continuously adjustable from the cab (hydraulic adjustment)

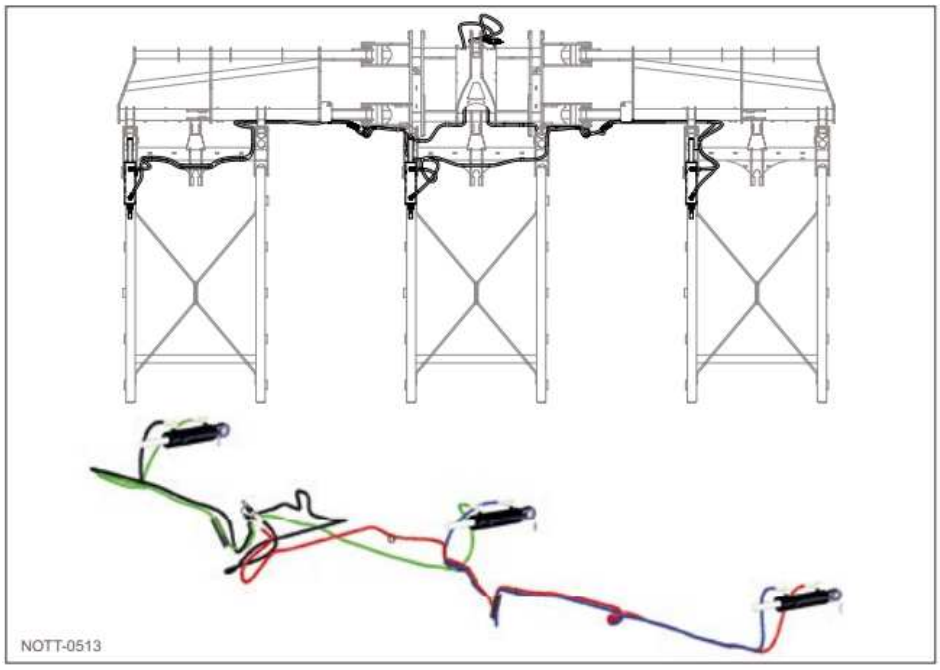

Activate the hydraulic distributor in the desired direction. The tilt adjustment is synchronized across the entire width of the machine.

The tilt level is visible on the graduated scale (1) depending on whether the tool is equipped with this option.

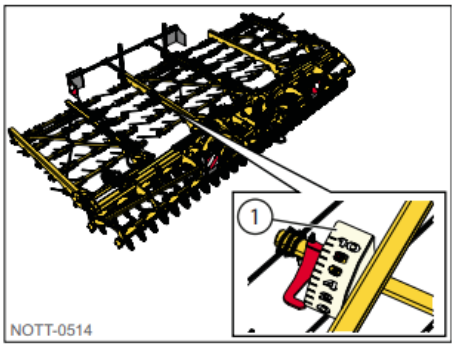

6.6.2. Adjusting the working depth of the combs

The depth of the combs can be adjusted both from the cab (hydraulic adjustment) and on the machine.

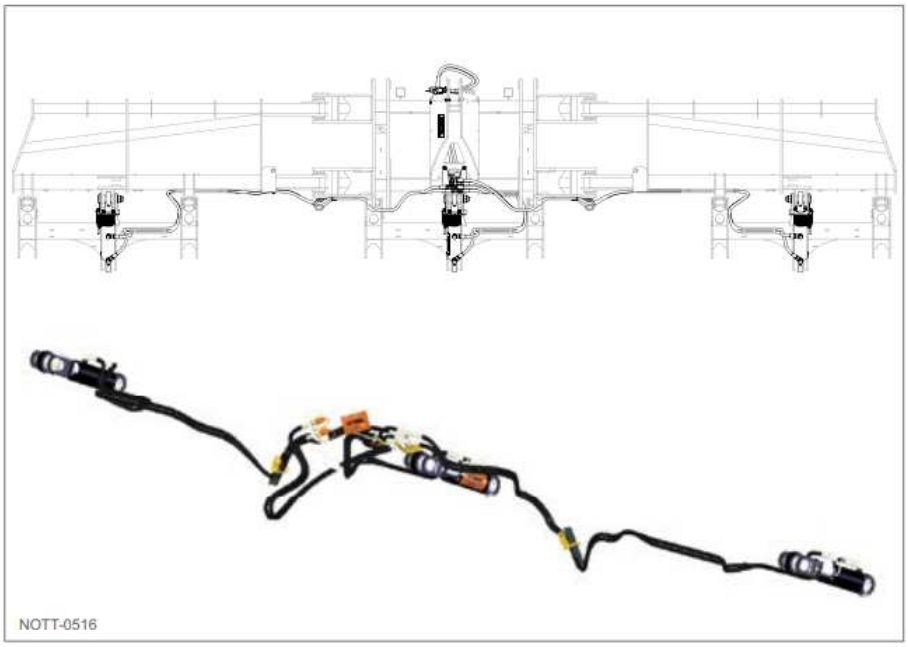

The adjustment is made using shims located on the cylinders. To increase the working depth and aggressiveness, remove shims, and conversely to decrease the working depth.

1 - Operate the distributor to remove the rod from the cylinder in order to release the shims.

2 - Determine the number of wedges required.

3 - Operate the distributor in the opposite direction in order to bring the cylinder barrel into contact with the shims.



IMPORTANT: It is essential to use the same number of shims on each of the cylinders.

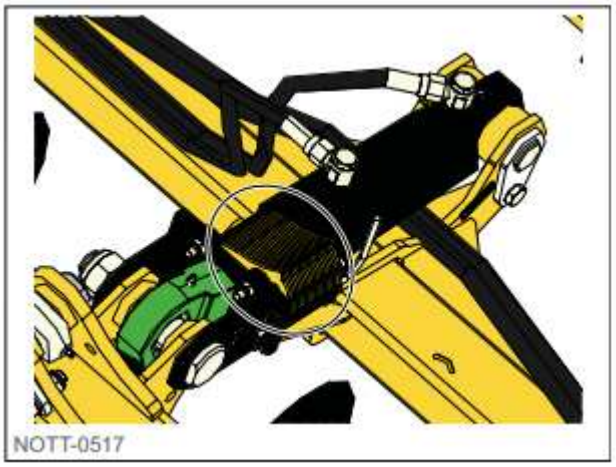

6.7. Fieldwork

The tool works as shown in the diagram below. At the end of the working line, you must turn on the Faca rollers without touching the tool's lift/lower control. To do this, you should work every other line to avoid an excessively large turning radius that could damage the tool's components.

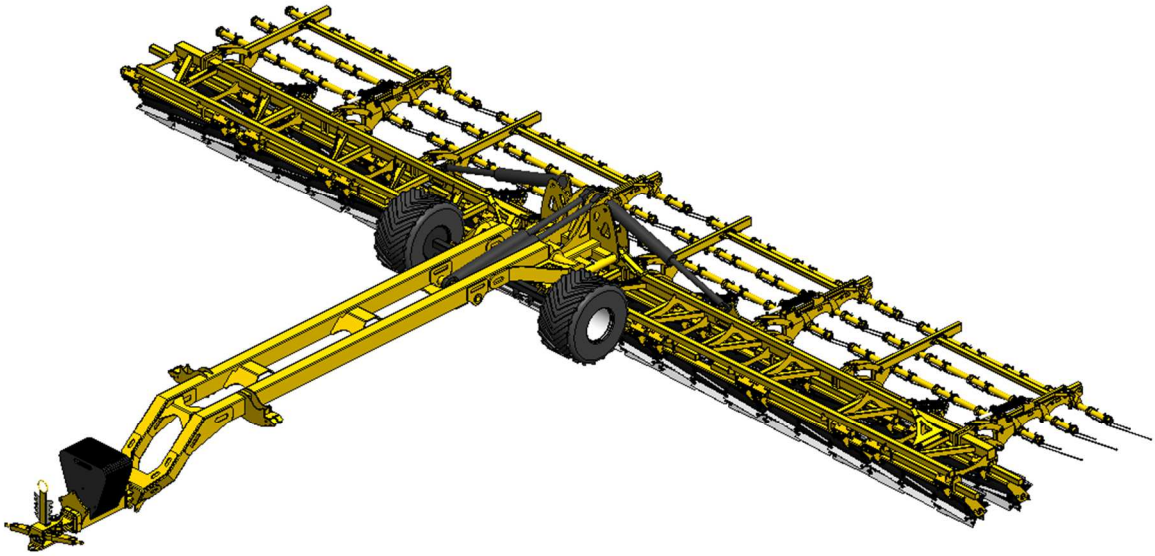

To keep the extensions horizontal, you must continuously activate the folding cylinder distributor. Remember to connect the free return line directly to the tractor's reservoir with a ¾" fitting.

The pressure should be around 30 bar, depending on the strength of the extensions. You must adjust the pressure using a flow regulator. A pressure gauge indicates the pressure in the system. A 30 bar accumulator is integrated into the folding cylinder circuit to ensure system safety during operation.

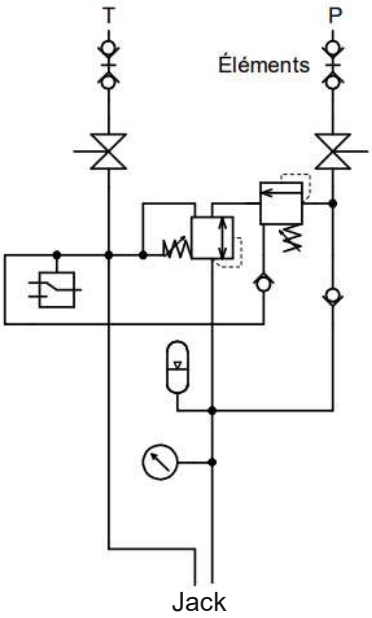

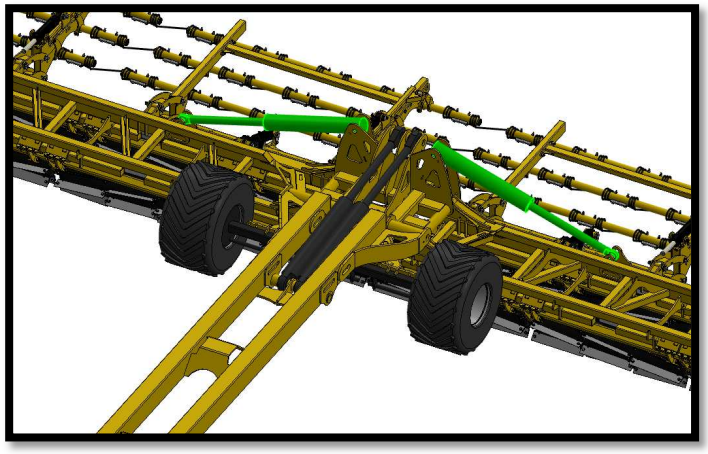

7. Storage - Handling - Transport

7.1. Storage

If the machine is not to be used for an extended period:

- Perform the machine cleaning maintenance operation - Store the machine away from moisture and inclement weather.
- Position the machine on a flat, solid and stable surface.
- Unplug the electrical control devices and store them in a dry place.
- Protect the machine against rust. Only spray with readily biodegradable oils, e.g. rapeseed oil.
- Unload the wheels using compliant and inspected lifting and chocking equipment and accessories, in accordance with applicable regulations. Use standardized and secure chocking systems to prevent any riskaccident related to unstable stalling.
- Protect the piston rods of hydraulic cylinders against corrosion.
- Perform lubrication according to the maintenance plan given in the user manual.

IMPORTANT



The machine should be stored indoors whenever possible to prevent premature aging. However, if stored outdoors, it must be unfolded to prevent damage from humidity. This prevents rainwater from accumulating and penetrating the hubs during storage. Such damage would irreparably compromise the hub bearing and consequently its lifespan. The warranty will be void if traces of water or humidity are found during an inspection for a claim.



ATTENTION

Never work on a raised machine without it being secured by means of appropriate lifting and shoring equipment.



ATTENTION

Do not spray plastic and rubber parts with oil or anti-corrosion agents. Otherwise, the parts may become brittle and break.

7.2. Handling



ATTENTION

Never stand in the handling area under risk of serious injury or death.



ATTENTION

The lifting points must be used simultaneously to ensure safe handling.



Fig. 15

ATTENTION

During handling, some parts may be sharp. Handle parts using appropriate personal protective equipment (gloves, goggles, safety shoes).

The machines are equipped with attachment points for the lifting phases. Pictograms allow for quicker identification.

All handling must be carried out using lifting and securing equipment and accessories that comply with and are inspected according to the regulations in force and are appropriate for the load to be moved.

To find out the approximate weight of the whole thing, see the Characteristics chapter.

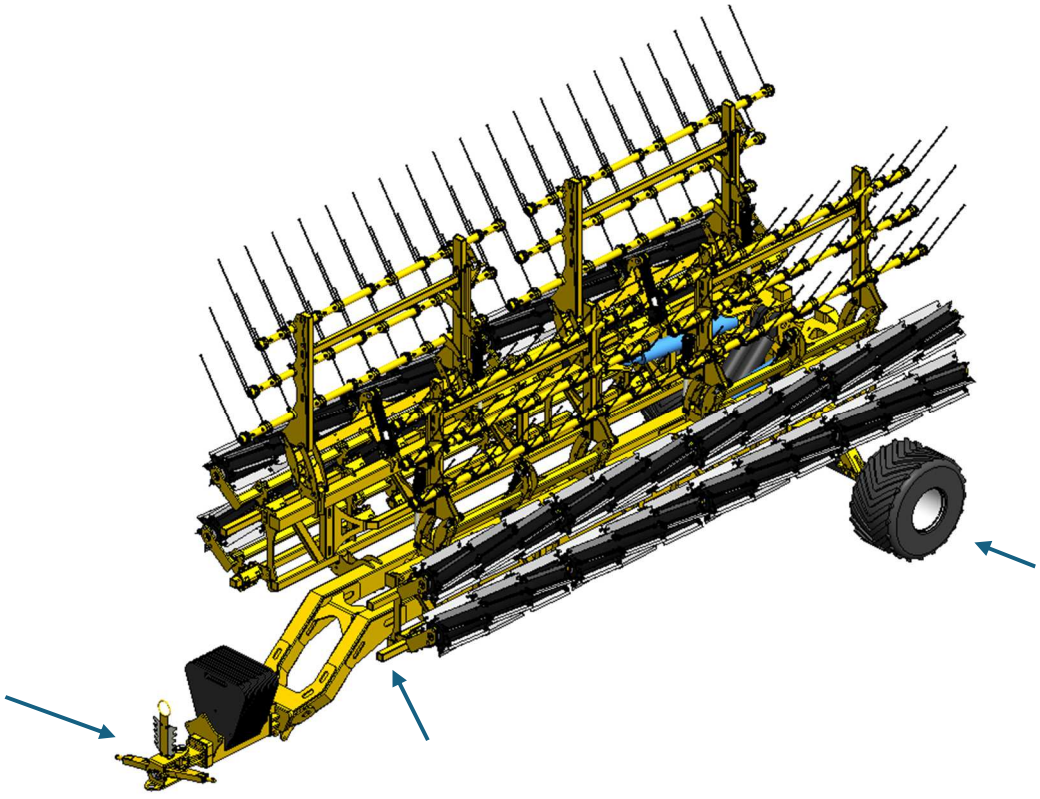

7.3. Transport



Fig. 16

ATTENTION

Securely fasten the machine with compliant and inspected straps according to the regulations in force on the platform.

Ensure that no unsecured objects are on the platform to prevent material from being thrown onto the machine during transport.

The machines are equipped with attachment points for transport phases. Pictograms allow for quicker identification.

All transport must be carried out using compliant and inspected securing and lashing equipment and accessories in accordance with applicable regulations.

During transport the machine must be secured as described below.

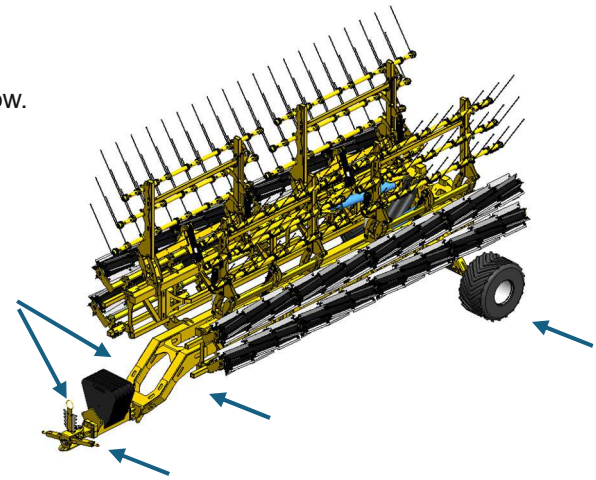

8. Maintenance

8.1. Maintenance advice

8.1.1. Introduction

Respect the instructions of security related has the interview and has there maintenance. There machin East designed and built for maximum performance, profitability, and comfort in a variety of operating conditions, it was inspected at the factory and by the dealer before delivery to ensure you receive a machine in perfect working order. To keep it in optimal condition, it is important that all maintenance and servicing be carried out according to the recommended intervals.

To ensure the machine remains operational and performs optimally, regular cleaning and maintenance are necessary. Hydraulic components and bearings must not be cleaned with a high-pressure cleaner or directly with a water jet. Housings, threaded fittings, and bearings are not watertight under very high-pressure cleaning. 8.1.2. Personal Protective Equipment (PPE)

ATTENTION

Maintenance operations require handling of loads and materials necessitating the wearing of personal protective equipment.

It is essential to wear appropriate personal protective equipment when carrying out maintenance operations.

Risk	Examples of personal protective equipment
Cuts	Gloves
Crushing	Gloves, safety shoes, protective helmet
Hydrocarbons	Gloves
Dust	Mask
Noise	Hearing protection

8.1.3. Machine shutdown

WARNING

Before any maintenance operation, the machine must be disconnected from all hydraulic, mechanical, and electrical power. Secure the machine and take all necessary precautions to prevent accidental movement.

8.1.4. Machine Cleaning

WARNING

Before any maintenance operation, the machine must be cleaned to prevent any risk of accidental injury.

8.1.5. Welding

NOTE

Depending on the type of machine: before any work on the electrical circuit or before any welding operation, disconnect the electrical harnesses coming from the tractor. Disconnect the battery and alternator cables.

WARNING

Do not weld or use a blowtorch near pressurized fluids or flammable products.

ATTENTION

Wear appropriate personal protective equipment for welding.

8.1.6. Protective devices

WARNING

Inspect the machine for any external damage and check the condition of the safety devices. The safety devices must be clean, legible, and in good working order. If not, contact AGRISEM INTERNATIONAL's after-sales service for replacement.

8.1.7. Tires

HAZARD

Tires contain pressurized air. Never exceed the recommended inflation pressure.

WARNING

Regularly check the state of tires, And this, on all their surface.

WARNING

Clean the tires of any traces of hydrocarbons.

WARNING

The permissible load capacities of the tractor's tires must not be exceeded.

8.1.8. Hydraulic circuit



WARNING

The machine is powered by pressurized hydraulic energy; working on a pressurized circuit can lead to injury from contamination. All work must be carried out by professionals trained in the handling of hydraulic technologies. In case of injury caused by hydraulic oil, seek immediate medical attention. Risk of infection.



HAZARD

Do not attempt, under any circumstances, to seal a leak in hydraulic lines with your hand or fingers; use a suitable leak detection tool.



WARNING

Completely depressurize the hydraulic circuit before any work is carried out on it.

When connecting the hydraulic lines to the tractor's hydraulic circuit, ensure that the hydraulic circuits of the tractor and the machine are not under pressure.



NOTE

Using lubricants and mineral products according to instructions does not pose a health risk. However, prolonged skin contact and inhalation of fumes should be avoided.

WARNING



Protect yourself from direct contact with oils by wearing gloves or using protective creams. Avoid skin contact with oil-soaked clothing. Change your clothes and rags when they become soiled. Carefully wash any traces of oil from your skin with warm water and soap. Do not clean your skin with gasoline, diesel fuel, or other detergents.
The oil is toxic. If the oil is swallowed, seek medical help immediately. Rinse any oil splashes in the eyes with clean water and consult a doctor if necessary.



WARNING

Keep lubricants out of reach of children. Never store lubricants in open or unlabeled containers.



WARNING

Absorb the spilled oil with a binding agent and remove it.

Never extinguish oil fires with water, use only authorized and appropriate extinguishing agents and wear respiratory protection.



WARNING

Check that the hydraulic lines are correctly connected. Regularly check the condition and cleanliness of the hydraulic lines and connections.

NOTE

The service life of hydraulic lines must not exceed six years, including a maximum storage period of two years. Even with proper storage and use within permissible limits, hoses and fittings undergo normal aging, hence the limitation on their storage and service life.



Have the hydraulic pipes inspected at least once a year by a specialist to ensure they are in good condition.

Replace damaged or worn hydraulic lines.

Use only hydraulic lines from the original AGRISEM INTERNATIONAL.

However, the service life can be determined based on empirical values, particularly taking into account potential risks. For thermoplastic hoses and pipes, other reference values may be considered.



Waste should not be thrown in a regular bin but collected through a specific channel in accordance with current standards.

Dispose of used oil in accordance with applicable regulations. If you have any problems, contact your oil supplier.

Dispose of oil-soaked shoes as hazardous waste.

The product or its packaging is technically recyclable but not recycled.

Products will only be recycled under two conditions: - The sorting and recycling sector exists in your territory, - They have been correctly sorted.



Oil-contaminated waste and used oils must be disposed of in accordance with applicable regulations.

Take care not to contaminate the soil or water with hydraulic oil, respect the instructions mentioned on the container of the consumable and the regulations in force.

8.1.9. Electrical



WARNING

Depending on the type of machine: before any work on the electrical circuit or before any welding operation, disconnect the electrical harnesses coming from the tractor.



WARNING

Before any work on the electrical installation, disconnect the negative terminal of the battery.

WARNING



Ensure the battery terminals are connected correctly, starting with the positive terminal, then the negative terminal. When disconnecting the terminals, start with the negative terminal, then disconnect the positive terminal.

Always place the cover provided for this purpose on the positive terminal of the battery. Beware of the risk of explosion if it is shorted to ground.



HAZARD

Risk explosion: prevents the formation of sparks and open flames near the battery.

8.2. Maintenance Consumables

Consumable	Features	Volume
Fat	lithium grease reinforced with molybdenum disulfide / NLGI2 grade	-

NOTE

To use uniquelythe specified consumables. AGRISEM INTERNATIONAL cannot be held responsible in the event of the use of other types of consumables.

8.3. Maintenance Schedule

NOTE

Maintenance intervals are determined by many factors. For example, different operating conditions, atmospheric influences, driving and working speeds, dust emissions and soil type, etc., have an influence, but also the quality of the lubrication and maintenance products used determines the time until the next maintenance work.

NOTE

The maintenance intervals indicated should therefore only serve as a guideline. When operating conditions deviate from normal conditions, the intervals for the relevant maintenance work must be adjusted accordingly.

Maintenance operations to be carried out before each use
Check THEhydraulic lines.
Check THElighting and signaling system.
Check tire pressure.
Maintenance operations to be carried out before each folding
Clean the areas of replication.
Maintenance operations to be carried out after the first 10 hours of use
Check that the bolts are tight.
Check the hydraulic system (tightening and sealing).
Check that the wheels are tight.
Perform a complete diagnostic of the machine to ensure there are no problematic components.
Clean the dirt off the machine.
Maintenance operations to be carried out every 50 hours or every 6 months
Check that the bolts are tight.
Check the hydraulic system (tightening and sealing).
Check that the wheels are tight.
Perform a complete diagnostic of the machine to ensure there are no problematic components.
Maintenance operations to be carried out every 50 hours or every 6 months
Grease the joints with grease guns.

Clean the dirt off the machine.
Adjust the braking system.
Maintenance operations after each pressure cleaning
Grease the machine.
Maintenance operations to be carried out every 100 hours or every 12 months
Wear rings
Maintenance operations to be carried out every 6 years
Replace the hydraulic hoses.

8.4. Maintenance Operations

8.4.1. Check the hydraulic lines

Inspection criteria for hydraulic pipes



ATTENTION

For your own safety, please adhere to the following inspection criteria.

If any of the following defects are found, replace the hydraulic hose immediately. :

- Deterioration of the outer layer down to the lining (e.g., friction areas, cuts, cracks).
- Weakening of the outer layer (formation of cracks on the envelope).
- Deformations not corresponding to the natural shape of the hose or pipe, whether in the unpressurized or pressurized state, or in bending (e.g., layer separation, blistering, crushing points, bends).
- Non-watertight areas.
- Damage or deformation of the nozzle (impairing the seal); minor superficial damage is not a reason for replacement.
- The flexible hose detaches from the nozzle.
- Corrosion of the tip, resulting in a reduction of function and strength.
- Failure to comply with assembly specifications.
- The service life has exceeded 6 years. The following information is essential: the manufacturing date of the hydraulic line indicated on the fitting, plus 6 years. If the manufacturing date indicated on the fitting is "2004", the service life ends in February 2010.

Installation and removal of hydraulic pipes



WARNING

When installing and removing hydraulic pipes, the following instructions must be strictly observed.

- Use only hydraulic lines from the original AGRISEM INTERNATIONAL.

- Always ensure cleanliness.
- Always install hydraulic lines in such a way that, in all operating conditions:
  - They should not be subjected to any tension other than that induced by their weight.
  - There is no crushing on short lengths.
  - There are no external mechanical actions on the hydraulic lines.
  - Prevent hoses from rubbing against machine components or against each other by positioning and securing them correctly. Protect hydraulic lines with protective sleeves where necessary. Cover components with sharp edges.
  - The permitted radii of curvature must not be exceeded.
- In the event of connecting a hydraulic line to moving parts, the length of the hose must be measured so that the total range of movement is not less than the smallest permissible radius of curvature and/or that the line is not subjected to additional tension.
- Secure the hydraulic lines to the designated locations. Avoid supports that could cause natural movement and changes in the hose length.

WARNING

Painting hydraulic pipes is prohibited.

Hydraulic pipe marking

The hoses must be replaced every 6 yearsfrom their date of manufacture.

The hydraulic pipes have markings to identify their year of manufacture. manufacturing.

Landmark	Designation
1	Month of manufacture
2	Year of manufacture
3	Batch number

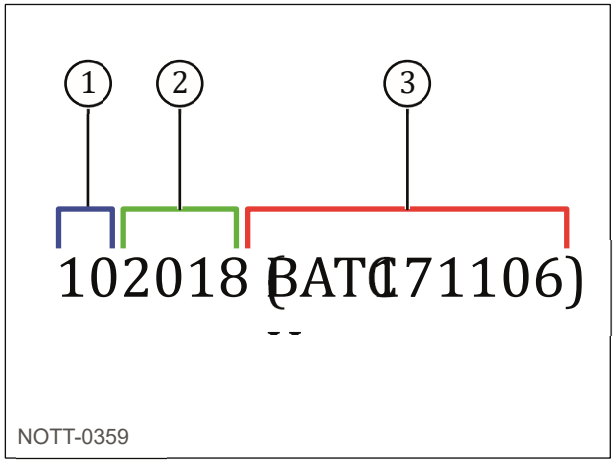

Fig. 17

Check THElighting and signaling system 8.4.2.

Before each journey on the road network, check that your lighting system is in perfect working order and clean.

WARNING

Never enter the road network if any of these elements are not in good condition.

Replacing the light bulbs:

1 - Disconnect the signaling ramp.
2 - Unscrew the protective glass.
3 - Remove the faulty bulb.
4 - Put the replacement bulb in place (respect the voltage and amperage).
5 - Replace the protective glass and screw it in.

For machines equipped with LED lighting, replace the entire unit with an original unit.

NOTT-FR-631-A

8.4.3. Clean the folding areas

Before folding the machine, it is essential to clean the folding areas. The accumulation of dirt, stones, or other obstacles can damage the machine. Failure to comply with this recommendation will void the warranty.

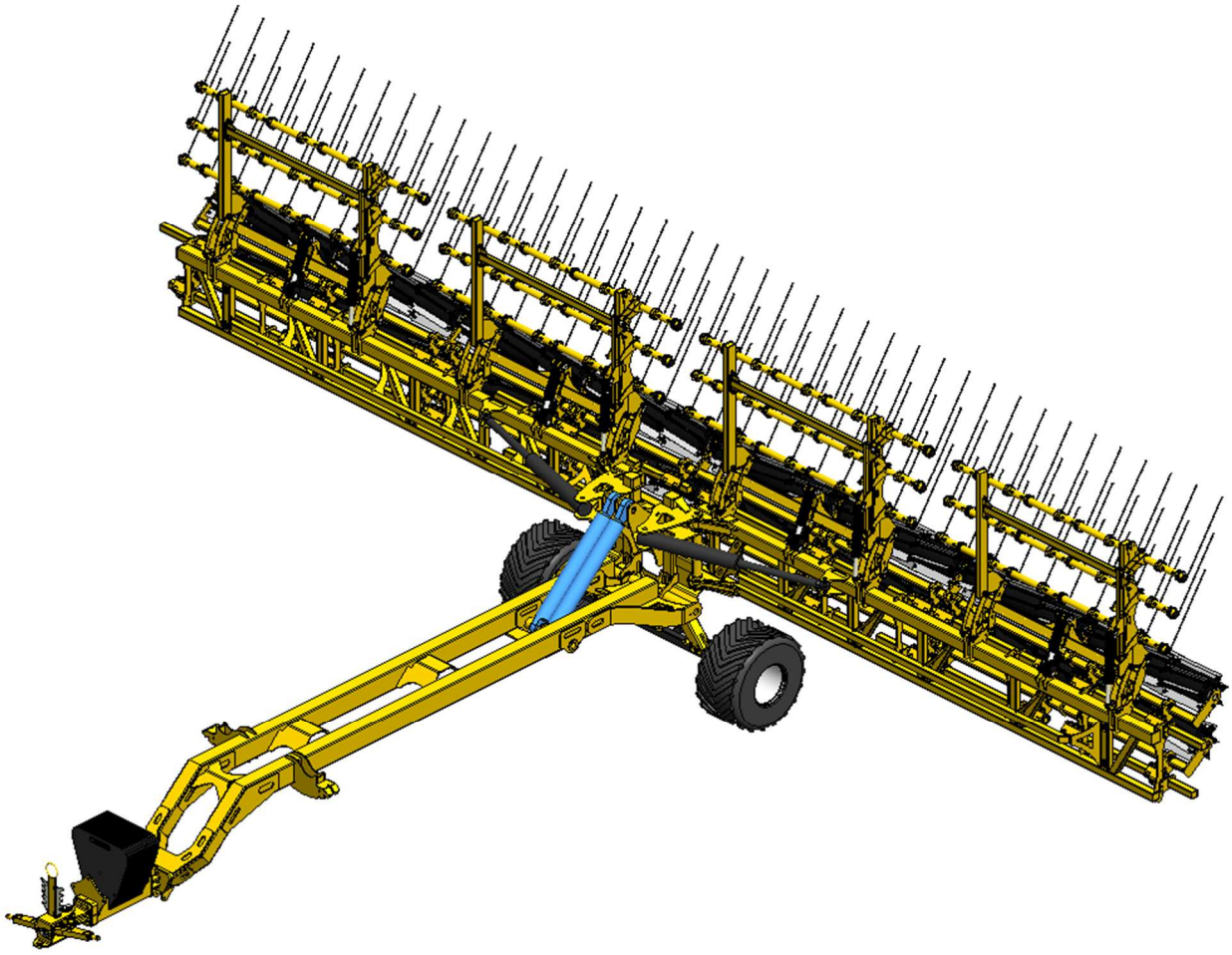

Fig. 18

8.4.4. Check the tightening of there bolts

Refer to the table.

ISO 272			Classe de qualité boulonnerie acier ISO898-1													
			5,6		5,8		6,8		8,8		9,8		10,9		12,9	
d mm	ISO mm	mm	Cs	Fo	Cs	Fo	Cs	Fo	Cs	Fo	Cs	Fo	Cs	Fo	Cs	Fo
1,6**	0,35	3,2	0,086	210	0,120	294	0,137	335	0,183	447	0,206	503	0,269	657	0,315	769
2**	0,40	4	0,183	349	0,256	488	0,293	558	0,390	744	0,439	837	0,573	1 093	0,671	1 279
2,5**	0,45	5	0,383	582	0,536	815	0,612	931	0,816	1 242	0,918	1 397	1,20	1 824	1,40	2 134
3	0,50	5,5	0,66	874	0,92	1 224	1,06	1 399	1,41	1 866	1,60	2 099	2,07	2 740	2,43	3 207
4	0,70	7	1,51	1 514	2,11	2 120	2,42	2 422	3,22	3 230	3,66	3 635	4,74	4 744	5,5	5 552
5	0,80	8	3,00	2 481	4,20	3 473	4,81	3 970	6,4	5 293	7,27	5 958	9,4	7 774	11,0	9 098
6	1	10	5,2	3 498	7,2	4 893	8,3	5 598	11,1	7 464	12,57	8 392	16,3	10 962	19,1	12 828
8	1,25	13	12,6	6 426	17,7	8 997	20	10 283	27	13 710	30,62	15 423	39	20 137	46	23 565
10	1,50	16	25	10 238	35	14 334	40	16 382	53	21 843	61	24 575	78	32 082	92	37 542
12	1,75	18	43	14 934	60	20 908	69	23 895	92	31 860	105	35 849	136	46 795	159	54 760
14	2	21	69	20 514	97	28 719	111	32 822	148	43 763	167	49 142	218	64 277	255	75 218
16	2	24	108	28 280	152	39 592	174	45 248	232	60 331	262	67 944	341	88 611	399	103 694
18	2,5	27	149	34 324	209	48 054	239	54 919	330	75 421			469	107 549	549	125 856
20	2,5	30	213	44 188	298	61 863	341	70 700	471	97 253			667	138 456	781	162 023
22	2,5	34	293	55 298	411	77 418	470	88 478	648	121 574			920	173 269	1 077	202 762
24	3	36	366	63 630	513	89 083	586	101 809	809	140 084			1 148	199 376	1 343	233 313
27	3	41	544	83 910	762	117 474	871	134 257	1 201	184 517			1 706	262 920	1 997	307 672
30	3,5	46	737	101 914	1 032	142 679	1 180	163 062	1 628	224 292			2 311	319 331	2 704	373 685
33	3,5	50	1 004	127 210	1 406	178 094	1 607	203 536	2 216	279 953			3 148	398 593	3 684	466 438
36	4	55	1 288	149 174	1 803	208 844	2 060	238 679	2 840	328 236			4 036	467 413	4 723	546 973
39	4	60	1 677	179 487	2 348	251 282	2 683	287 179	3 697	394 919			5 255	562 393	6 150	658 119
42**	4,5	65	2 070	205 323	2 898	287 452	3 312	328 516	4 554	451 710			6 486	643 344	7 590	752 849
45**	4,5	70	2 596	240 641	3 635	336 897	4 154	385 025	5 712	529 410			8 136	754 008	9 520	882 350
48**	5	75	3 130	270 321	4 383	378 449	5 009	432 514	6 887	594 706			9 809	847 006	11 478	991 177
52**	5	80	4 041	324 763	5 657	454 668	6 465	519 620	8 889	714 478			12 661	1 017 590	14 816	1 190 797
56**	5,5	85	5 034	374 739	7 048	524 635	8 054	599 582	11 075	824 426			15 773	1 174 182	18 458	1 374 043
60**	5,5	90	6 266	438 337	8 772	613 672	10 026	701 340	13 785	964 342			19 634	1 373 457	22 976	1 607 237
64**	6	95	7 533	495 676	10 546	693 947	12 052	793 082	16 572	1 090 488			23 603	1 553 119	27 620	1 817 480

*Classe 8-8a jusqu'a d=16 mm, 8-8b à partir de d=118 mm

NOTT-0229

Fig. 19

8.4.5. Check the hydraulic system (tightness and sealing)

Check the tightness of all hydraulic circuit components. If necessary, tighten the threaded fittings.

8.4.6. Check the tightening of the wheels

Check the tightness of the wheels before and after each use.

Refer to the attached axle supplier's instructions.

8.4.7. Perform a diagnosis complete of there machine

Complete all operations in the start-up section.

Perform all necessary maintenance operations before each use.

8.4.8. Clean the dirt off the machine

Clean the dirt off the machine using a high-pressure cleaner.

NOTT-FR-631-A

ATTENTION

When using a high-pressure cleaner or a steam cleaner, the following points must be strictly observed:

- Do not clean electrical and hydraulic components.
- Never clean the jet from the nozzle of the high pressure cleaner or steam cleaner directly towards the lubrication points and bearings.
- Always maintain a distance between the nozzle and the machine.

Follow the rules for using high-pressure cleaners. The machine must be lubricated regularly and after each pressure cleaning.

8.4.9. Grease the joints with grease gun

The lubrication points are identified by this pictogram:

The machine must be greased regularly and after each pressure cleaning.



Fig. 20

Folding and lifting/lowering cylinders

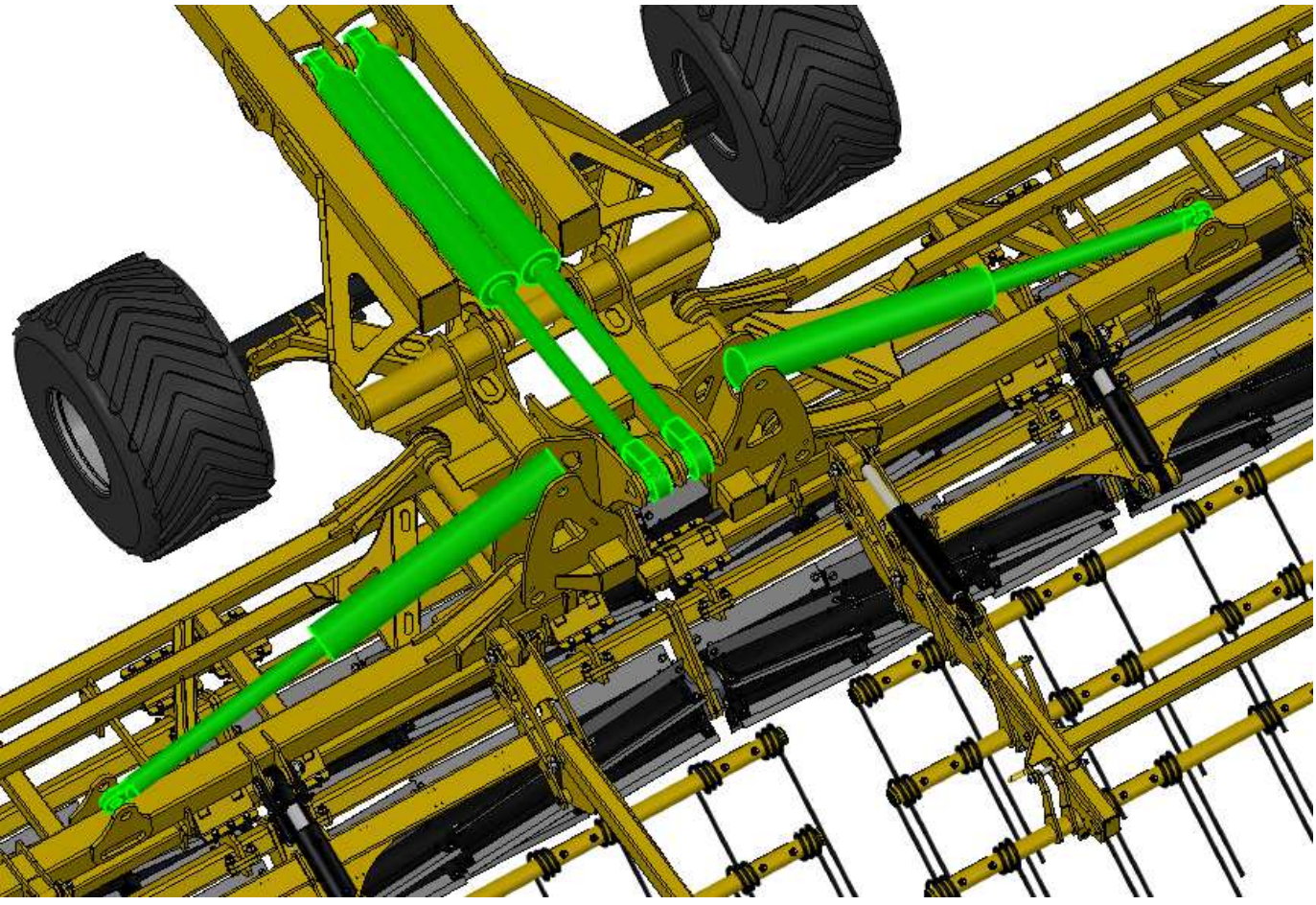

ATTENTION

The machine must be greased regularly and after each pressure cleaning.

This helps keep the machine operational and reduces repair costs and downtime.

8.4.10. Replace the flexible hydraulics

After the replacement of all the flexible of the machine, check waterproofing of all the components of hydraulic circuit, see "8.4.5. Check the system hydraulic (tightening) And waterproofing)", page 56.

8.4.11. Wear rings

The wear rings must be replaced when the friction band is completely worn, or when wear causes blockages or stiff spots. The friction band is approximately 1.5 mm thick.

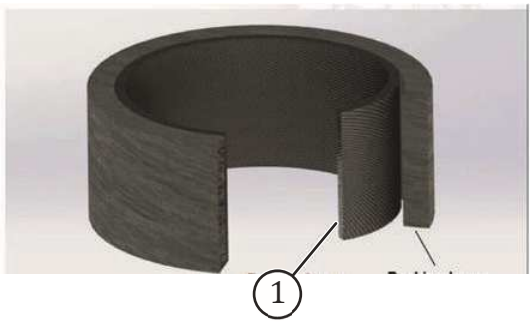

NOTT-0357

Fig. 22

Depending on the assembly and options, the wear rings are located at the main pivot points of the machine.

8.4.12. Tire pressure

System	Average pressure	Maximum pressure
Support wheel	2.5 bar	3.5 bar

9. Breakdowns, causes and remedies

Issue	Point has check	Solution
The machine does not work at the same depth on the right and left.	Tractor jack stands	The tractor's axle stands must be adjusted to the same length.
The machine won't go into the ground.	Wear on the plowshares	Replace the plowshares.
	Ground pressure	Adjust the pneumatic downforce pressure.
A blockage appears at the level of the teeth.	Depth of work	Reduce the working depth of the machine.
	Comb wear	Replace the combs.
The working depth is uneven.	Adjusting the extensions	Adjust the extension settings.
	Cylinder race	Adjust the machine height at the level of the lift and wheels

Breakdowns, causes and remedies

10. Characteristics

	9 m	12 m	15
Working width (in m)	9	12	15
Transport width - without accessories (in m)	2.99		
Transport height (in m)	3.89	3.89	3.89
Length without harrow comb (in m)	11.00		
Rear overhang (from the hitch) (in m)	6.91		
Weight depending on configuration (in kg)	6,800	7,500	9,300
Hitch type	Cat. 3		
Chassis	5-row chassis, 80x120 mm side rails		
Clearance under chassis	620 mm		
Adjusting the working depth	Group		
Recommended power min-max (in hp)	180 - 240	220 - 280	260 - 320
Number of hydraulic distributors	4 double effect		
Signage	Plates reflective + lighting LED		
Comb type	Carbide-free comb		
Number of ranks	252	336	420
Options	Cutter Roller Ø380		

11. Technical terms and abbreviations

Term	Meaning
HAS	ampere - unit of electric current intensity
bar	bar - unit of pressure
cm	centimeter - unit of length
cm3	cubic centimeter - unit of volume
EAR	personal protective equipment
Ha	hectare -unit of area
ISOBUS	standardized data transfer system

kg/h	kilograms per hour - unit of flow rate
kg/ha	kilogram per hectare - unit of density
km/h	kilometer per hour - unit of speed
L	liter - unit of volume
l/min	liters per minute - unit of flow rate
LS	load sensing - load-sensing hydraulic circuit
m	meter - unit of length
mm	millimeter - unit of length
rpm	revolutions per minute - unit of rotational speed
V	volt - unit of voltage
W	watt - unit of power

12. Annexes

Declaration of Conformity to the "Machinery" Directive

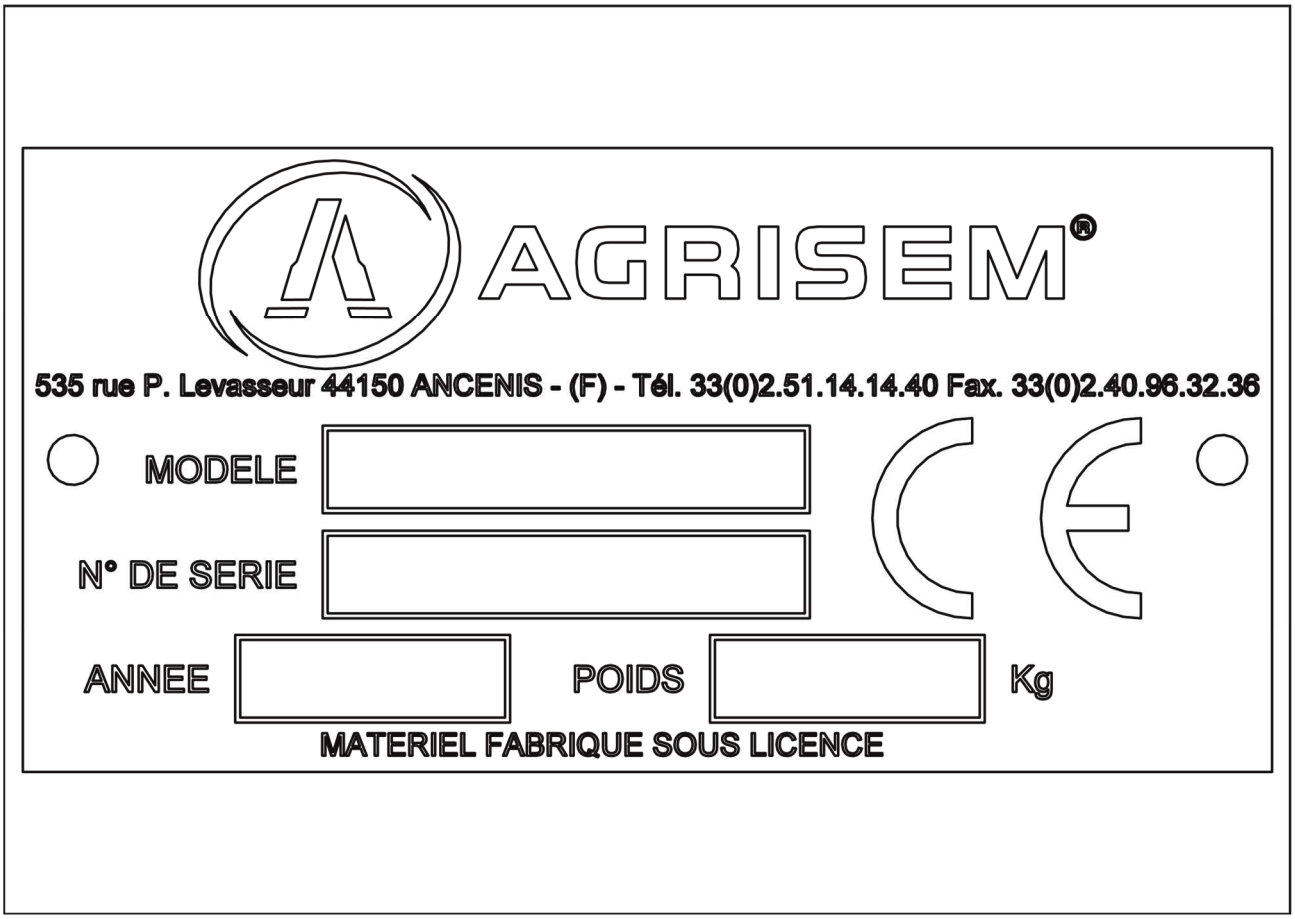

The manufacturer referred to above certifies that the new equipment described below

TURBOMULCH EXTRA Trailed

Complies with the provisions of the amended "Machinery" directive (Directive 2006/42/EC) and with the applicable national legislation.

Done at Ancenis.

June 21, 2024

Michal GUZOWSKI

CEO

AGRISEM®

WARRANTY CERTIFICATE NO.

to be returned upon receipt of the machine

Dealer	**Buyer**
Name	Name
Address	Address
Such	Such
Code No.	

Machine type	
Working width	
Machine serial number	
Customer and user delivery date	
Make, model and power of the tractor used	
Soil type - % clay	
Usable agricultural area of the farm	

Done at: THE

Buyer's signature and stamp	Signature and stamp of the dealer

We acknowledge having read the entire user manual and the warranty terms to which we agree.

AGRISEM INTERNATIONAL SA - 535 rue Pierre Levasseur - CS 60263 - 44158 ANCENIS - FRANCE Tel: 02.51.14.14.40 - Fax: 02.40.96.32.36

Warranty Claim Form No.			
Dealer name		Dealer's stamp	
Case handled by			
Date of purchase of the machine		AGRISEM invoice number	
Name and address of the user client			
Date of delivery at the house ofthe user *(Attach a copy of the invoice and the dealer delivery note)*		Utilized agricultural area (UAA) of the farm(s)	
Machine serial number		Working width	
Designation of the combined equipment (brand and type)			
Brand of tractor used			
Model of tractor used		Power	
Detailed description and alleged causes of the incident			
Date of the breakdown		Current date	
Part number	Quantity	Designation	
Request to send part	**YES**	Request to have	**YES**
Photos attached	**YES**	Return of parts *Shipping costs are the responsibility of the sender.*	**YES**
Results of the AGRISEM INTERNATIONAL expert assessment			
Comments			
Date		Visa	
Technical Manager			
agrisem@agrisem.com			

AGRISEM INTERNATIONAL SA - 535 rue Pierre Levasseur - CS 60263 - 44158 ANCENIS - FRANCE
Tel: 02.51.14.14.40